ACiQ

R32 18K-60K TOP-DISCHARGE AC COOLING-ONLY & HEAT PUMP CONDENSERS

INSTALLATION & OWNER'S MANUAL

Models Covered:

AC-I-18AC14	AC-I-18HP14
AC-I-24AC14	AC-I-24HP14
AC-I-30AC14	AC-I-30HP14
AC-I-36AC14	AC-I-36HP14
AC-I-42AC14	AC-I-42HP14
AC-I-48AC14	AC-I-48HP14
AC-I-60AC14	AC-I-60HP14

WARNING: DO NOT destroy or lose this manual. Please read the manual thoroughly. Also, store the manual in a place that allows for easy retrieval and future reference. As a result of continuous product improvement, the specification and design of this product are subject to change without advanced notice. Consult your manufacturer or your dealer for further details regarding this product. The images and illustrations within this this manual are for reference only. The actual shape and size of your product may vary.

VERSION DATE: 05-14-26

RECOGNIZE THIS SYMBOL AS AN INDICATION OF IMPORTANT SAFETY INFORMATION

⚠ WARNING

These instructions are intended as an aid to qualified licensed service personnel for proper installation, adjust-ment and operation of this unit. Read these instructions thoroughly before attempting installation or operation. Failure to follow these instructions may result in improper installation, adjustment, service or maintenance possibly resulting in fire, electrical shock, property damage, personal injury or death.

⚠ WARNING

This appliance is not intended for use by persons (including children) with reduced physical, sensory or mental capabilities, or lack of experience and knowledge, unless they have been given supervision or instruction concerning use of the appliance by a person responsible for their safety.Children should be supervised to ensure that they do not play with the appliance.This unit is only used outdoor.

CONTENTS

1 SAFETY

- 1.1 Safety Signs 01
- 1.2 Safety Precautions 02

2 UNIT LOCATION CONSIDERATIONS

- 2.1 Unit Dimensions 07
- 2.2 Required Refrigerant Line Length 07
- 2.3 Location Restrictions 07
- 2.4 Refrigerant Charge and Room Area Limitations 08

3 UNIT PREPARATION

- 3.1 Pre-installation 12

4 SETTING UP THE UNIT

- 4.1 Pad Installation 12

5 REFRIGERANT LINE CONSIDERATIONS

- 5.1 Service Valve Connection Sizes 13
- 5.2 Refrigerant Line Insulation 13
- 5.3 Reuse Existing Refrigerant Lines 13

6 REFRIGERANT LINE ROUTING

- 6.1 Precautions 14

7 REFRIGERANT LINE CONNECTION

- 7.1 Connecting to Refrigerant Lines 16

8 REFRIGERANT LINE BRAZING

- 8.1 Braze the Refrigerant Lines 16

9 REFRIGERANT LINE LEAK CHECK

- 9.1 Check for Leaks 17

10 EVACUATION

- 10.1 Evacuate the Refrigerant Lines and Indoor Coil 18

11 SERVICE VALVES

- 11.1 Open the Service Valves 18

12 ELECTRICAL - LOW VOLTAGE

- 12.1 Low Voltage Maximum Wire Length 19
- 12.2 Low Voltage Wiring 20

13 ELECTRICAL - HIGH VOLTAGE

- 13.1 High Voltage Power Supply 25
- 13.2 High Voltage Disconnect Switch and Breaker 25
- 13.3 High Voltage Wiring 26

14 START UP

- 14.1 System Start Up 26

15 ERROR CODE TABLE 27

16 SERVICE

- 16.1 Maintenance 28
- 16.2 Changing Motor 28

17 WIRING DIAGRAMS 29

18 CHECKLIST 31

19 DISPOSAL 31

1 SAFETY

1.1 Safety Signs

This is the general warning sign. It is used to alert the user to potential hazards. All safety messages that follow this sign shall be obeyed to avoid possible harm.

⚠ DANGER

Indicates a hazard with a high level of risk which, if not avoided, will result in death or serious injury.

⚠ WARNING

Indicates a hazard with a medium level of risk which, if not avoided, could result in death or serious injury.

⚠ CAUTION

Indicates a hazard with a low level of risk which, if not avoided, could result in minor or moderate injury.

NOTE

A situation that may cause damage to the equipment or loss of property.

Explanation of symbols displayed on the unit

A2L R32	**DANGER**	This symbol shows that this appliance uses a mild flammable refrigerant. If the refrigerant is leaked and exposed to an external ignition source, there is a risk of fire.
≥ A m²	**WARNING**	This symbol shows that the appliance shall be installed, operated and stored in a room with a floor area not less than the minimum room area.
	CAUTION	This symbol shows that the operation manual should be read carefully.
	CAUTION	This symbol shows that a service personnel should be handling this equipment with reference to the installation manual.
	CAUTION	This symbol shows that information is available such as the operating manual or installation manual.

1.2 Safety Precautions

Please read before proceeding

⚠ DANGER

ELECTRICAL HAZARD 380 VOLTS DC

Failure to follow this warning could result in property damage, severe personal injury, or death.

WAIT FIVE (5) MINUTES after disconnecting power prior to touching electrical components as they may hold a dangerous charge of 380 VDC,then verify DC Voltage is less than 42VDC at inverter TEST POINTS P-N.

NOTE

- This document is customer property and is to remain with this unit. Please return to service information pack upon completion of work.
- These instructions do not cover all variations in systems or provide for every possible contingency to be met in connection with the installation.
- Should further information be desired or should particular problems arise which are not covered sufficiently for the purchaser's purposes, the matter should be referred to your installing dealer or local distributor.

NOTE

The manufacturer recommends installing only approved matched indoor and outdoor systems. Some of the benefits of installing approved matched indoor and outdoor split systems are maximum efficiency, optimum performance and the best overall system reliability.

This document contains a wiring diagram.
This is customer property and is to remain with this unit.

⚠ WARNING

This information is intended for use by individuals possessing adequate backgrounds of electrical and mechanical experience. Any attempt to repair air conditioning product may result in personal injury and/or property damage.

⚠ WARNING

HOT SURFACE

May cause minor to severe burning. Failure to follow this Caution could result in property damage or personal injury.
Do not touch the high-temperature components such as compressor .

⚠ DANGER

HAZARDOUS VOLTAGE

Failure to follow this warning could result in property damage, severe personal injury, or death.

Disconnect all electric power, Including remote disconnects before servicing. Follow proper lockout/tagout procedures to ensure the power cannot be inadvertently energized.

⚠ CAUTION

CONTAINS REFRIGERANT

Failure to follow proper procedures can result in personal illness or injury or severe equipment damage. System contains oil and refrigerant under high pressure. Recover refrigerant to relieve pressure before opening system.

Flammable refrigerant used.

⚠ WARNING

REFRIGERANT OIL

These units use R32 refrigerant. Use only R32 approved service equipment. These units use a POE oil that readily absorbs moisture from the atmosphere. To limit this 'hygroscopic" action, the system should remain sealed whenever possible. If a system has been open to the atmosphere for more than 4 hours, the compressor oil must be replaced. Never break a vacuum with air and always change the driers when opening the system for component replacement.

⚠ CAUTION

ELETRICAL GROUNDING REQUIRED

Failure to inspect or use proper service tools may result in equipment damage or personal injury. All parts of this product that are capable of conducting electrical current are grounded. If grounding wires, screws, straps, clips, nuts, or washers used to complete a path to ground are removed for service, they must be returned to their original position and properly fastened.

⚠ WARNING

SERVICE VALVES

Failure to follow this warning will result in abrupt release of system charge and may result in personal injury and/or property damage. Extreme caution should be exercised when opening the Liquid Line Service valve. Turn valve stem counterclockwise only until the stem contacts the rolled edge.

⚠ WARNING

BRAZING REQUIRED

Failure to inspect lines or use proper service tools may result in equipment damage or personal injury. If using existing refrigerant lines make certain that all joints are brazed, not soldered.

If refrigerant gas leaks during installation, ventilate the area immediately.

Comply with national gas regulations.

⚠ WARNING

HIGH CURRENT LEAKAGE

Proper grounding is required before connecting electrical supply. Failure to follow this warning could result in property damage, severe personal injury, or death.

⚠ WARNING

RISK OF FIRE

Mild flammable refrigerant used.

Follow handling instructions carefully in compliance with national regulations.

⚠ DANGER

FIRE, EXPLOSION

Store in a well ventilated room without continuously operating flames or other potential ignition.

⚠ WARNING

Risk of electric shock. Can cause injury or death. Disconnect all remote electric power supplies before servicing.

Risk of fire mild. Flammable refrigerant used. To be repaired only by trained service personnel. Do not puncture refrigerant tubing.

Risk of fire. Dispose of properly in accordance with federal or local regulations.

Risk of fire. Consult repair manual/owner's guide before attempting to service this product. All safety precautions must be followed.

Risk of fire – auxiliary devices which may be ignition sources shall not be installed in the ductwork, other than auxiliary devices listed for use with the specific appliance. See instructions.

⚠ WARNING

Do not use means to accelerate the defrosting process or to clean, other than those recommended by the manufacturer.

The appliance shall be stored in a room that does not have continuously operating ignition sources (for example: open flames, an operating gas appliance or an operating electric heater).

Do not pierce/puncture refrigerant lines or burn the unit.

Be aware that refrigerants may not contain an odor.

⚠ WARNING

This appliance is not intended for use by persons (including children) with reduced physical, sensory or mental capabilities, or persons who lack experience and knowledge, unless they are supervised or have been given instructions concerning the use of the appliance by a person responsible for their safety.

Children should be supervised to ensure that they do not play with the appliance.

Any person who is involved with working on or opening a refrigerant circuit should hold a current valid certificate from an industry-accredited assessment authority, which authorizes their competence to handle refrigerants safely in accordance with an industry recognized assessment credential.

Servicing shall only be performed as recommen-ded by the equipment manufacturer.

Maintenance and repair requiring the assistance of other skilled personnel shall be carried out under the supervision of a person competent in the use of flammable refrigerants.

Prior to beginning work on systems containing flammable refrigerants, safety checks are necessary to minimize the risk of ignition.

⚠ WARNING

When repairing the refrigerating system, comply with the following precautions prior to conducting work on the system:

– shall be undertaken according to controlled procedures so as to minimize the risk of the presence of flammable gases or vapors while the work is being performed.

– All maintenance staff and others working in the local area shall be instructed on the nature of work being carried out. Work in confined spaces shall be avoided.

– The area shall be checked with an appropriate refrigerant detector prior to and during work, to ensure the technician is aware of potentially toxic or flammable environment.

Ensure that the leak detection equipment being used is suitable for use with all applicable refrigerants, i.e. non-sparking, adequately sealed or intrinsically safe.

– If any brazing/welding is to be conducted on the refrigerating equipment or any associated parts, appropriate fire extinguishing equipment shall be available and easily accessible. Have a dry powder or CO2 fire extinguisher adjacent to the charging area.

– When carrying out work in relation to a refrigerating system that involves exposing any pipe work, no sources of ignition shall be used in such a manner that it may lead to the risk of fire or explosion.

All possible ignition sources, including cigarette smoking, should be kept sufficiently far away from the site of installation, repair, or removal and disposal of the unit, during which refrigerant can possibly be released into the surrounding space. Prior to beginning work, the area around the equipment is to be surveyed to make sure that there are no flammable hazards or ignition risks. "No Smoking" signs shall be clearly displayed.

Ensure that the area is in the open or that it is adequately ventilated before opening the system or conducting any hot work. A degree of ventilation shall continue during the period that the work is carried out. The ventilation should safely disperse any released refrigerant and preferably expel it externally into the surroundings.

Where electrical components are being changed, they shall be fit according to their purpose and to the correct specification. At all times the manufacturer's maintenance and service guidelines shall be followed. If in doubt, consult the manufacturer's technical department for assistance. The following checks shall be applied to installations using flammable refrigerants:

– The actual refrigerant charge is in accordance with the room size within which the refrigerant containing parts are installed.

– The ventilation machinery and outlets are operating adequately and are not obstructed.

– If an indirect refrigerating circuit is being used, the secondary circuit shall be checked for the presence of refrigerant.

– Equipment marking must remain visible and legible. Markings and signs that are illegible shall be corrected.

Refrigerating pipe or components are installed in a position where they are unlikely to be exposed to any substances which may corrode refrigerant containing components, unless the components are constructed of materials that are inherently resistant to corrosion or are suitably protected against corrosion.

Repair and maintenance of electrical components shall include initial safety checks and component inspection procedures. If a fault exists that could compromise safety, then no electrical supply shall be connected to the circuit until the fault has been dealt with satisfactorily.

If the fault cannot be corrected immediately but it is necessary to continue operation, an adequate temporary solution shall be used. This shall be reported to the owner of the equipment so that all parties are advised. Initial safety checks shall include:

– That capacitors are discharged: this shall be done in a safe manner to avoid the possibility of sparking.

– That no live electrical components and wiring are exposed while charging, recovering or purging the system.

– That there is continuity of proper grounding.

⚠ WARNING

Sealed electrical components shall be replaced.

Intrinsically safe components must be replaced.

Check that cabling will not be subject to wear, corrosion, excessive pressure, vibration, sharp edges or any other adverse environmental effects. The check shall also take into account the effects of aging or continual vibration from sources such as compressors or fans.

Under no circumstances shall potential sources of ignition be used while searching for or detection of refrigerant leaks. A halide torch (or any other detector using a naked flame) shall not be used.

Electronic leak detectors may be used to detect refrigerant leaks but, in the case of flammable refrigerants, the sensitivity may not be adequate, or may need re-calibration. (Detection equipment shall be calibrated in a refrigerant-free area.) Ensure that the detector is not a potential source of ignition and is suitable for the refrigerant used. Leak detection equipment shall be set at a percentage of the LFL of the refrigerant and shall be calibrated for the refrigerant employed, and the appropriate percentage of gas (25 % maximum) is confirmed.

If a leak is suspected, all naked flames shall be removed/extinguished.

If a leakage of refrigerant which requires brazing is found, all of the refrigerant shall be recovered from the system, or isolated(by means of shut off valves) in a part of the system remote from the leak.

Leak detection fluids are also suitable for use with most refrigerants but the use of detergents containing chlorine shall be avoided as the chlorine may react with the refrigerant and corrode the copper pipe-work.

NOTE：Examples of leak detection fluids are

-bubble method,

When breaking into the refrigerant circuit to make repairs - or for any other purpose -conventional procedures shall be used. However, for flammable refrigerants it is important that best practices be followed, since flammability is a consideration. The following procedure shall be adhered to:

- safely remove refrigerant following local and national regulations.

- evacuate.

-purge the circuit with inert gas.

- evacuate.

- continuously flush or purge with inert gas when using flame to open circuit; and.

- open the circuit.

The refrigerant charge shall be recovered into the correct recovery cylinders if venting is not allowed by local and national codes. For appliances containing flammable refrigerants, the system shall be purged with oxygen-free nitrogen to render the appliance safe for flammable refrigerants. This process might need to be repeated several times. Compressed air or oxygen shall not be used for purging refrigerant systems.

For appliances containing flammable refrigerants, refrigerants purging shall be achieved by breaking the vacuum in the system with oxygen-free nitrogen and continuing to fill until the working pressure is achieved, then venting to atmosphere, and finally pulling down to a vacuum. This process shall be repeated until no refrigerant is within the system .When the final oxygen-free nitrogen charge is used, the system shall be vented down to atmospheric pressure to enable work to take place.

The outlet for the vacuum pump shall not be close to any potential ignition sources, and ventilation shall be available.

Ensure that contamination of different refrigerants does not occur when using charging equipment. Hoses or lines shall be as short as possible to minimise the amount of refrigerant they contain.

When use a refrigerant tank with siphon to add refrigerant, the refrigerant tank should be placed upright. When use a refrigerant tank without siphon to add refrigerant, the refrigerant tank should be placed upside down. Ensure that the refrigeration system is grounded prior to charging the system with refrigerant.

In general, R32 doesn't have a siphon tube or dip tube into tank. For this situation, they must be charged in liquid form to prevent fractionation of the blended refrigerant and that requires the jug to be inverted during charging.

Label the system when charging is complete (if it is not already labeled).

Take extreme care not to overfill the refrigeration system.

Prior to recharging the system, it shall be pressure-tested with the appropriate purging gas. The system shall be leak-tested on completion of charging but prior to commissioning. A follow up leak test shall be carried out prior to leaving the site.

Before carrying out this procedure, it is essential that the technician is completely familiar with the equipment and all its detail. It is recommended that all refrigerants are recovered safely. Prior to the task being carried out, an oil and refrigerant sample shall be taken in case analysis is required prior to re-use of reclaimed refrigerant. It is essential that electrical power is available before the task is commenced.

a) Become familiar with the equipment and its operation.

b) Isolate system electrically.

c) Before attempting the procedure ensure that:

– mechanical handling equipment is available, if required, for handling refrigerant cylinders;

– all personal protective equipment is available and being used correctly;

– the recovery process is supervised at all times by a competent person;

– recovery equipment and cylinders conform to the appropriate standards.

d) Pump down refrigerant system, if possible.

e) If a vacuum is not possible, make a manifold so that refrigerant can be removed from various parts of the system.

f) Make sure that the cylinder is situated on the scales before recovery takes place.

g) Start the recovery machine and operate it in accordance with the manufacturer's instructions.

h) Do not overfill cylinders. (No more than 80% volume liquid charge).

i) Do not exceed the maximum working pressure of the cylinder, even temporarily.

j) When the cylinders have been filled correctly and the process has been completed, make sure that the cylinders and the equipment are removed from site promptly and all isolation valves on the equipment are closed off.

k) Recovered refrigerant shall not be charged into another refrigeration system unless it has been cleaned and checked.

Equipment shall be labeled stating that it has been de-commissioned and emptied of refrigerant. The label shall be dated and signed. Ensure that there are labels on the equipment stating the equipment contains flammable refrigerant.

When removing refrigerant from a system, either for servicing or decommissioning, it is recommended that all refrigerants are removed safely.

When transferring refrigerant into cylinders, ensure that only appropriate refrigerant recovery cylinders are employed. Ensure that the correct number of cylinders for holding the total system charge is available. All cylinders to be used are designated for the recovered refrigerant and labelled for that refrigerant (i.e.special cylinders for the recovery of refrigerant). Cylinders shall be complete with pressure-relief valve and associated shut-off valves in good working order. Empty recovery cylinders are evacuated and, if possible, cooled before recovery occurs.

The recovery equipment shall be in good working order with a set of instructions concerning the equipment that is at hand and shall be suitable for the recovery of the flammable refrigerant. If in doubt, the manufacturer should be consulted. In addition, a set of calibrated weighing scales shall be available and in good working order. Hoses shall be complete with leak-free disconnect couplings and in good condition.

The recovered refrigerant shall be processed according to local legislation in the correct recovery cylinder, and the relevant waste transfer note arranged. Do not mix refrigerants in recovery units and especially not in cylinders.

If compressors or compressor oils are to be removed, ensure that they have been evacuated to an acceptable level to make certain that flammable refrigerant does not remain within the lubricant. The compressor body shall not be heated by an open flame or other ignition sources to accelerate this process. When oil is drained from a system, it shall be carried out safely.

Do not use the air conditioner for other purposes.

In order to avoid any quality deterioration, do not use the unit for the cooling of precision instruments, food, plants, animals or works of art.

Before cleaning, be sure to stop the operation, turn the breaker off or unplug the supply cord. Otherwise, electric shock and injury may occur.

In order to avoid electric shock or fire, make sure that an earth ground detector is installed.

Never touch the air outlet or the horizontal blades while the swing flap is in operation.Your fingers may become caught or the unit may break down.

Never put any objects into the air inlet or outlet.

Objects touching the fan at high speed can be dangerous.

Never inspect or service the unit by yourself.

Ask a qualified service person to perform this task.

Do not dispose of this product as unsorted municipal waste. This waste should be collected separately for special treatment.

Do not dispose of electrical appliances as unsorted municipal waste. Use separate collection facilities. Contact your local government for information regarding the connection systems available.

If electrical appliances are disposed of in landfills or dumps, hazardous substances can leak into the groundwater and get into the food chain, harming your health and well-being.

To prevent refrigerant leak, contact your dealer.

When the system is installed and operates in a small room, it is required to maintain the concentration of the refrigerant below the limit, in case a leak occurs. Otherwise, oxygen in the room may be affected, resulting in a serious accident.

The refrigerant in the air conditioner is safe and normally does not leak.

If the refrigerant leaks into the room and comes into contact with the fire of a burner, a heater or a cooker, a harmful gas could be released.

Turn off any combustible heating devices, ventilate the room, and contact the dealer where you purchased the unit.

Do not use the air conditioner until a service person confirms that the refrigerant leak is repaired.

Keep ventilation openings clear of obstruction.

⚠ CAUTION

Be sure the air conditioner is grounded. In order to avoid electric shock, make sure that the unit is grounded and that the ground wire is not connected to a gas or water pipe, lightning conductor or telephone ground wire.

Do not operate the air conditioner with a wet hands. An electric shock may happen.

Do not operate the air conditioner when using a room fumigation-type insecticide. Failure to observe this precaution could cause the chemicals to become deposited in the unit, which could endanger the health of those who are hypersensitive to chemicals. It may also cause the refrigerant sensor to alarm.

To avoid oxygen deficiency, ventilate the room sufficiently if equipment with a burner is used together with the air conditioner.

Arrange the drain hose to ensure smooth drainage. Incomplete drainage may cause damage to the building, furniture, etc.

Never touch the internal parts of the controller. Do not remove the front panel. Some parts inside are dangerous to touch, and machine troubles may occur.

Attention is drawn to the fact that additional transportation regulations may exist with respect to equipment containing flammable gas. The maximum number of pieces of equipment or the configuration of the equipment permitted to be transported together will be determined by the applicable transport regulations.

Signs for similar appliances used in a work area are generally addressed by local regulations and give the minimum requirements for the provision of safety and/or health signs for a work location.

Storage package protection should be constructed such a way that mechanical damage to the equipment inside the package will not cause a leak of the REFRIGERANT CHARGE.

The maximum number of pieces of equipment permitted to be stored together will be determined by local regulations.

All required signs are to be maintained and employers should ensure that employees receive suitable and sufficient instruction and training on the meaning of appropriate safety signs and the actions that need to be taken in connection with these signs.

The effectiveness of signs should not be diminished by too many signs being placed together.

Any pictograms used should be as simple as possible and contain only essential details.

The storage of the appliance should be in accordance with the applicable regulations or instructions, whichever is more stringent.

Do not operate the air conditioner when using a room fumigation - type insecticide. Failure to observe this precaution could cause the chemicals to become deposited in the unit, which could endanger the health of those who are hypersensitive to chemicals.

Do not place appliances which produce open flame in places exposed to the air flow from the unit or under the indoor unit. It may cause incomplete combustion or deformation of the unit due to the heat.

Do not install the air conditioner in a location where flammable gas may leak out. If the gas leaks out and stays around the air conditioner, a fire may break out.

⚠ WARNING

The appliance uses R32 refrigerant.

⚠ WARNING

This outdoor unit must combine the indoor unit with a refrigerant leak detection device.

These instructions are exclusively intended for qualified contractors and authorized installers.

Work on the refrigerant circuit with mild flammable refrigerant in safety group A2L may only be carried out by authorized heating contractors. These heating contractors must be trained in accordance with UL 60335-2-40, Section HH. The certificate of competence from an industry accredited body is required.

Work on electrical equipment may only be carried out by a qualified electrician.

Before initial commissioning, all safety – related points must be checked by the particular certified heating contractors. The system must be commissioned by the system installer or a qualified person authorized by the installer.

NOTE

Recommend to use an aftermarket surge protector.

⚠ CAUTION

Annex CC
(informative)

Transportation, marking and storage for units that employ flammable refrigerants

CC.1 General
The following information is provided for units that employ FLAMMABLE REFRIGERANTS.
CC.2 Transport of equipment containing flammable refrigerants
Attention is drawn to the fact that additional transportation regulations may exist with respect to equipment containing flammable gas. The maximum number of pieces of equipment or the configuration of the equipment transported together will be determined by the applicable transport regulations.
CC.3 Marking of equipment using signs
Signs for similar appliances used in a work area are generally addressed by local regulations and give the minimum requirements for the provision of safety and/or health signs for a work location. All required signs are to be maintained and employers should ensure that employees receive suitable and sufficient instruction and training on the meaning of appropriate safety signs and the actions that need to be taken in connection with these signs.The effectiveness of signs should not be diminished by too many signs being placed together. Any pictograms used should be as simple as possible and contain only essential details.
CC4 Disposal of equipment using flammable refrigerants
See national regulations.
CC.5 Storage of equipment/appliances
The storage of the appliance should be in accordance with the applicable regulations or instructions, whichever is more stringent.
CC.6 Storage of packed (unsold) equipment
Storage package protection should be constructed in such a way that mechanical damage to the equipment inside the package will not cause a leak of the REFRIGERANT CHARGE.
The maximum number of pieces of equipment permitted to be stored together will be determined by local regulations.

2 UNIT LOCATION CONSIDERATIONS

⚠ WARNING

Ensure that apparatus is mounted securely.

2.1 Unit Dimensions

Heat Pump & AC Cooling-only Model

Unit Dimensions			
Model	H(inches)	W(inches)	L(inches)
18/24K	25	23-5/8	23-5/8
30/36K	25	29-9/64	29-9/64
42/48/60K	32-7/8	29-9/64	29-9/64

Table 2-1

The unit's weight value is on the cardboard box.

When mounting the outdoor unit on a roof, be sure the roof will support the unit's weight. Properly selected isolation is recommended to prevent sound or vibration transmission to the building structure.

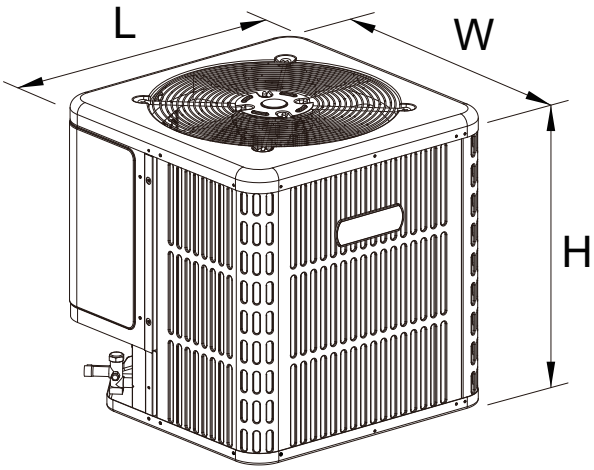

Figure 2-1

2.2 Required Refrigerant Piping Length

Refrigerant Piping		Capacity (Btu/h)			
		18K	24-36K	42K	48-60K
Liquid-Vapor	In.	3/8-3/4			
Max. Refrigerant Line Length*	Ft.	98	131	164	213
Max. Vertical Lift	Ft.	66	82	82	98
* It is recommended to adopt standard pipeline size;					

PIPING	
Max. Pre-charged Length(ft/m)	24.6(7.5)

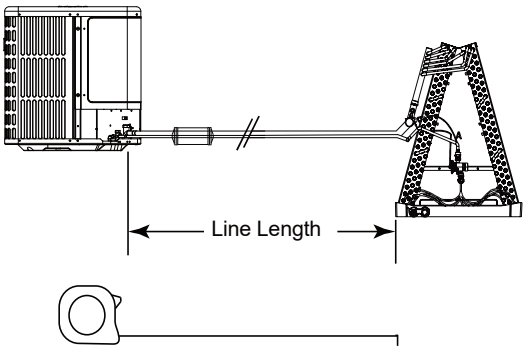

Figure 2-2

NOTE

Total Line Length _ Feet = Total Horizontal Line Length_ Feet + Total Vertical Change(Lift) _ Feet.

2.3 Location Restrictions

⚠ WARNING

The outdoor unit shall be located in a well-ventilated location other than the occupied space, such as in the open air.
For installation of the indoor unit, refer to the corresponding installation and operation manual. If an indoor unit is installed in an unventilated area, the area shall be so constructed that should any refrigerant leak, it will not stagnate so as to create a fire or explosion hazard.

Ensure the top discharge area is unrestricted for at least 60 inches above the unit.

Do not locate outdoor unit near bedrooms since normal operational sounds may be objectionable.

Position unit to allow adequate space for unobstructed airflow, wiring, refrigerant lines, and serviceability.

Maintain a distance of 24 inches between units.

24 inches clearance must be provided in front of the control box (access panels) and any other side requiring service.

Position unit where water, snow or ice from roof or overhang cannot fall directly on unit.

Position the outdoor unit a minimum of 12" from any wall or surrounding shrubbery to ensure adequate airflow.

See Figure 2-3 and Figure 2-4

Cold climate considerations (heat pump only)

NOTE

Precautions must be taken for units being installed in areas where snow accumulation and prolonged below-freezing temperatures occur.

- Units should be elevated 3-12 inches above the pad or rooftop, depending on local weather. This additional height will allow drainage of snow and ice melted during defrost cycle prior to its refreezing. Ensure that drain holes in unit base pan are not obstructed, preventing drainage of defrost water (Fig. 2-5).
- If possible, avoid locations that are likely to accumulate snow drifts. If not possible, a snow drift barrier should be installed around the unit to prevent a build-up of snow on the sides of the unit.

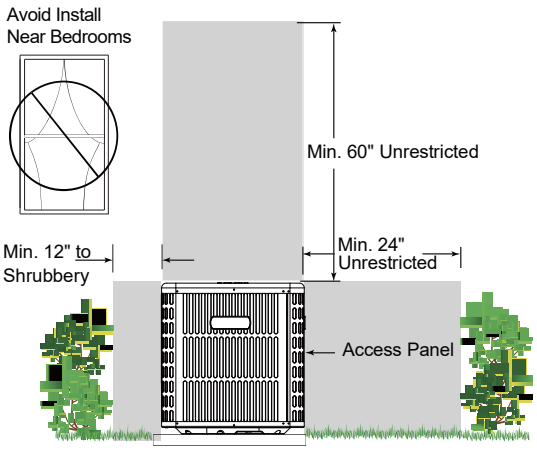

Figure 2-3

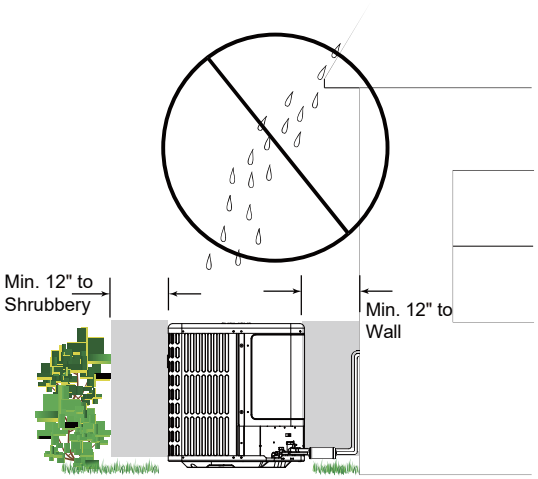

Figure 2-4

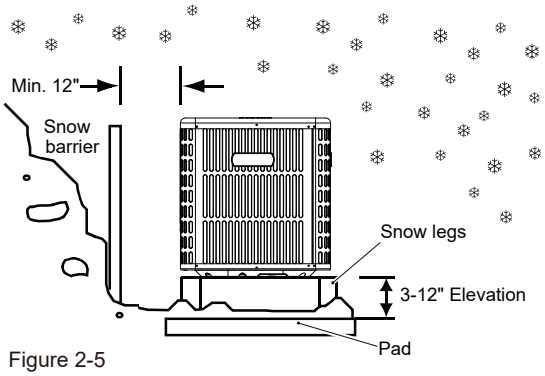

Figure 2-5

2.4 Refrigerant Charge and Room Area Limitations

In UL/CSA 60335-2-40, R32 refrigerant is classified as class A2L, which is mildly flammable. Therefore, R32 refrigerant will limit the area of the rooms being served by the system.

Similarly, the total amount of refrigerant in the system shall be less than or equal to the allowable maximum refrigerant charge. The allowable maximum refrigerant charge depends on the area of the rooms being served by the system.

NOTE

The abbreviations in this section are explained as follows:
m_c: The actual refrigerant charge in the system.
A: the actual room area where the appliance is installed.
A_{min}: The required minimum room area.
m_{max}:The allowable maximum refrigerant charge in a room.
Q_{min} : The minimum circulation airflow.
Anv_{min}: The minimum opening area for connected rooms.
TA_{min}: The required minimum total area of the conditioned space (For appliances serving two or more rooms with an air duct system).
TA: The total area of the conditioned space connected by air ducts. For appliances serving two or more rooms with an air duct system.

2.4.1 The room area calculation requirements

⚠ CAUTION

The space considered shall be any space which contains refrigerant-containing parts or into which refrigerant could be released.
The room area (*A*) of the smallest, enclosed, occupied space shall be used in the determination of the refrigerant quantity limits.

For determination of room area (*A*) when used to calculate the refrigerant charge limit, the following shall apply.
The room area (*A*) shall be defined as the room area enclosed by the projection to the base of the walls, partitions and doors of the space in which the appliance is installed.
Spaces connected by only drop ceilings, ductwork, or similar connections shall not be considered a single space.

Units mounted higher than 70-55/64 inches and spaces divided by partition walls that are no higher than 62-63/64 inches shall be considered a single space.
Rooms on the same floor and connected by an open passageway between the spaces can be considered a single room when determining compliance to A_{min}, if the passageway complies with all of the following.
1) It is a permanent opening.
2) It extends to the floor.
3) It is intended for people to walk through.

The area of the connected rooms, on the same floor,connected by permanent opening in the walls and/or doors between occupied spaces, including gaps between the wall and the floor, can be considered a single room when determining compliance to A_{min}, provided all of the following conditions are met as Figure 2-6.

1) Low level opening
①The opening shall not be less than Anv_{min} in Table 2-5.
②The area of any openings above 11-13/16 inches from the floor shall not be considered in determining compliance with Anv_{min}.
③At least 50 % of the opening area of Anv_{min} shall be below 7-7/8 inches from the floor.
④The bottom of the opening is not more than 3-15/16 inches from the floor.
⑤The opening is a permanent opening that cannot be closed.
⑥For openings extending to the floor the height shall not be less than 25/32 inches above the surface of the floor covering.

2) High level opening
①The opening shall not be less than 50 % of Anv_{min} in Table 2-5.
②The opening is a permanent opening that cannot be closed.
③The opening shall be at least 59 inches above the floor.
④The height of the opening is not less than 25/32 inches.

3）Room size requirement
①The room into which refrigerant can leak, plus the connected adjacent room(s) shall have a total area not less than A_{min}. A_{min} is shown in Table 2-7.
②The room area in which the unit is installed shall be not less than 20 % A_{min}. A_{min} is shown in Table 2-7.

NOTE

The requirement for the second opening can be met by drop ceilings, ventilation ducts, or similar arrangements that provide an airflow path between the connected rooms.

The minimum opening for natural ventilation (Anv_{min}) in connected rooms is related to the room area (*A*), the actual refrigerant charge of refrigerant in the system (m_c) , and the allowable MAXIMUM REFRIGERANT CHARGE in the system (m_{max}), Anv_{min} can be determined according to Table 2-5.

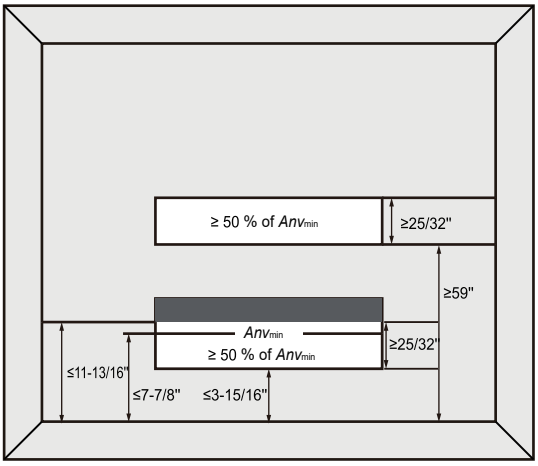

Figure 2-6 Opening conditions for connected rooms

The minimum opening area for connected rooms

A		m_c		m_{max}		Anv_{min}	
ft²	m²	lb-oz	kg	lb-oz	kg	ft²	m²
100	10	17-3	7.8	6-10	3.0	1.3	0.14
110	11	17-3	7.8	7-5	3.3	1.2	0.13
120	12	17-3	7.8	8-0	3.6	1.1	0.12
130	13	17-3	7.8	8-10	3.9	1.0	0.11
140	14	17-3	7.8	9-5	4.2	1.0	0.11
150	14	17-3	7.8	10-0	4.5	0.9	0.10
160	15	17-3	7.8	10-10	4.8	0.8	0.09
170	16	17-3	7.8	11-5	5.1	0.7	0.08
180	17	17-3	7.8	12-0	5.4	0.6	0.07
190	18	17-3	7.8	12-10	5.7	0.5	0.06
200	19	17-3	7.8	13-5	6.0	0.5	0.06
210	20	17-3	7.8	14-0	6.3	0.4	0.05
220	21	17-3	7.8	14-10	6.6	0.3	0.04
230	22	17-3	7.8	15-5	6.9	0.2	0.03
240	23	17-3	7.8	16-0	7.2	0.1	0.02
250	24	17-3	7.8	16-10	7.5	0.1	0.02
260	25	17-3	7.8	17-5	7.8	0.0	0.01

Table 2-5

Note: Take the m_c=17 lb 3 oz as an example.

For appliances serving two or more rooms with an air duct system, The room area calculation shall be determined based on the total area of the conditioned space (TA) connected by ducts taking into consideration that the circulating airflow distributed to all the rooms by the appliance integral indoor fan will mix and dilute the leaking refrigerant before entering any room.

2.4.2. The allowed maximum refrigerant charge and required minimum room area

If the fan incorporated to an appliance is continuously operated or operation is initiated by a REFRIGERANT DETECTION SYSTEM with a sufficient CIRCULATION AIRFLOW rate, the allowable maximum refrigerant charge (m_{max}) and the required minimum room area (A_{min}/TA_{min}) is shown in Table 2-6 and Table 2-7.

The allowable maximum refrigerant charge

A/TA		m_{max}		A/TA		m_{max}	
ft²	m²	lb-oz	kg	ft²	m²	lb-oz	kg
30	3	2-0	0.9	150	14	10-0	4.5
40	4	2-10	1.2	160	15	10-10	4.8
50	5	3-5	1.5	170	16	11-5	5.1
60	6	4-0	1.8	180	17	12-0	5.4
70	7	4-10	2.1	190	18	12-10	5.7
80	8	5-5	2.4	200	19	13-5	6.0
90	9	6-0	2.7	210	20	14-0	6.3
100	10	6-10	3.0	220	21	14-10	6.6
110	11	7-5	3.3	230	22	15-5	6.9
120	12	8-0	3.6	240	23	16-0	7.2
130	13	8-10	3.9	250	24	16-10	7.5
140	14	9-5	4.2	260	25	17-5	7.8

Table 2-6

The required minimum room area

m_c		A_{min}/TA_{min}		m_c		A_{min}/TA_{min}	
lb-oz	kg	ft²	m²	lb-oz	kg	ft²	m²
2-2	1.0	33.1	3.1	10-2	4.6	152.1	14.2
2-9	1.2	39.7	3.7	10-9	4.8	158.7	14.8
3-0	1.4	46.3	4.4	11-0	5.0	165.3	15.4
3-7	1.6	52.9	5.0	11-7	5.2	171.9	16.0
3-15	1.8	59.5	5.6	11-14	5.4	178.5	16.6
4-6	2.0	66.1	6.2	12 -5	5.6	185.1	17.2
4-13	2.2	72.7	6.8	12-12	5.8	191.7	17.9
5-4	2.4	79.3	7.4	13-3	6.0	198.4	18.5
5-11	2.6	86.0	8.0	13-10	6.2	205.0	19.1
6-2	2.8	92.6	8.7	14-1	6.4	211.6	19.7
6-9	3.0	99.2	9.3	14-8	6.6	218.2	20.3
7-0	3.2	105.8	99.9	14-15	6.8	224.8	20.9
7-7	3.4	112.4	10.5	15-6	7.0	231.4	21.5
7-15	3.6	119.0	11.1	15-14	7.2	238.0	22.2
8-6	3.8	125.6	11.7	16-5	7.4	244.6	22.8
8-13	4.0	132.2	12.3	16-12	7.6	251.2	23.4
9-4	4.2	138.8	12.9	17-3	7.8	257.9	24.0
9-11	4.4	145.5	13.6				

Table 2-7

The minimum circulation airflow

m_c		Q_{min}		m_c		Q_{min}	
lb-oz	kg	CFM	m³/h	lb-oz	kg	CFM	m³/h
2-2	1.0	59	100	10-2	4.6	275	467
2-9	1.2	71	121	10-9	4.8	287	488
3-0	1.4	83	141	11-0	5.0	298	506
3-7	1.6	95	161	11-7	5.2	310	527
3-15	1.8	107	182	11-14	5.4	322	547
4-6	2.0	119	202	12 -5	5.6	334	567
4-13	2.2	131	223	12-12	5.8	346	588
5-4	2.4	143	243	13-3	6.0	358	608
5-11	2.6	155	263	13-10	6.2	370	629
6-2	2.8	167	284	14-1	6.4	382	649
6-9	3.0	179	304	14-8	6.6	394	669
7-0	3.2	191	325	14-15	6.8	406	690
7-7	3.4	203	345	15-6	7.0	418	710
7-15	3.6	215	365	15-14	7.2	430	731
8-6	3.8	227	386	16-5	7.4	442	751
8-13	4.0	239	406	16-12	7.6	454	771
9-4	4.2	251	426	17-3	7.8	466	792
9-11	4.4	263	447				

Table 2-8

If the altitude of installation is higher than 2000 ft, the required minimum room area follow as Table 2-9.

	Altitude(ft)							
	2001-4000	4001-6000	6001-8000	8001-10000	10001-12000	12001-14000	14001-15000	above 15000
Charge lb	Minimum Conditioned Space(ft²)							
2	33	35	37	39	42	45	47	49
3	50	53	56	59	63	68	71	73
4	66	70	74	79	85	91	94	98
5	83	88	93	99	106	113	118	122
6	100	105	112	119	127	136	141	147
7	116	123	130	138	148	159	165	171
8	133	140	149	158	169	181	188	196
9	149	158	167	178	190	204	212	220
10	166	175	186	198	211	227	235	245
11	183	193	205	218	232	249	259	269
12	199	211	223	237	254	272	282	294
13	216	228	242	257	275	295	306	318
14	232	246	260	277	296	318	330	343
15	249	263	279	297	317	340	353	367
16	266	281	298	317	338	363	377	392
17	282	298	316	336	359	386	400	416
18	299	316	335	356	380	408	424	440
19	315	333	353	376	402	431	447	465
20	332	351	372	396	423	454	471	489

Table 2-9

⚠ CAUTION

The allowable maximum refrigerant charge of the Table 2-6 or the required minimum room area of the Table 2-7 is available only if the following conditions are met:
Minimum velocity of 3.28ft/s, which is calculated as the indoor unit airflow divided by the nominal face area of the outlet. And the grill area shall not be deducted.
Minimum airflow rate must meet the corresponding values in Table 2-8, which is related to the actual refrigerant charge of the system (m_c).
The R32 refrigerant leakage sensor is configured.

NOTE

The maximum refrigerant limit described above applies to unventilated areas. If adding additional measures, such as areas with mechanical ventilation or natural ventilation, The maximum refrigerant charge can be increased or the minimum room area can be reduced.
The R32 refrigerant leakage sensor is configured for the indoor unit, meets the incorporated circulation airflow requirements, the maximum refrigerant charge or minimum room area can be determined according to Table 2-6 or Table 2-7.

⚠ CAUTION

If the actual room area, air outlet height, and refrigerant charge amount are not reflected in the above table, more severe cases need to be considered according to the data in the Tables 2-5, 2-6, 2-7, 2-8.

- Installation scheme flow chart

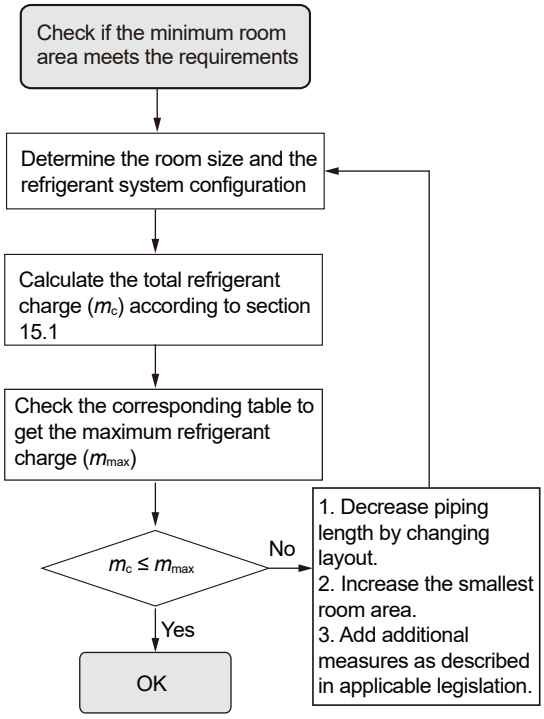

Figure 2-7

3 UNIT PREPARATION

3.1 Pre-installation

STEP 1 - Check for damage and report promptly to the carrier any damage found to the unit (Fig.3-1).

STEP 2 - Instruments must be designed to install/serve R32 equipmens.

- Gauge sets, hoses, refrigerant containers and recovery system must be designed to handle the POE type oils.
- Manifold sets should be 800 psig high side and 250 psig low side.
- All hoses must have a 700 psig service pressure rating.
- Leak detectors should be disigned to detect R32.
- Recovery equipments (including refrigerant recovery containers) must be specifically designed to handle R32.
- Do not use R410A/R22 TXV.

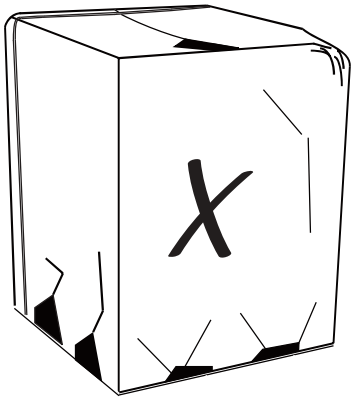

Figure 3-1

⚠ WARNING

The appliance shall be stored so as to prevent mechanical damage from occurring.

4 SETTING UP THE UNIT

4.1 Pad Installation

When installing the unit on a support pad, such as a concrete slab, consider the following:

- The pad must be at least 1-2" larger than the unit on all sides.
- The pad must be separate from any structure.
- The pad must be level.
- The pad must be high enough above grade to allow for drainage.
- The pad location must comply with National, State and Local codes.

NOTE

These instructions are intended to provide a method to tie-down system to concrete slab as a securing procedure for high wind areas. Check Local Codes for tie-down methods and protocols.

⚠ WARNING

The outdoor unit suction pipe service valve and liquid pipe service valve need to be protected. Do not grab them when moving the outdoor unit.

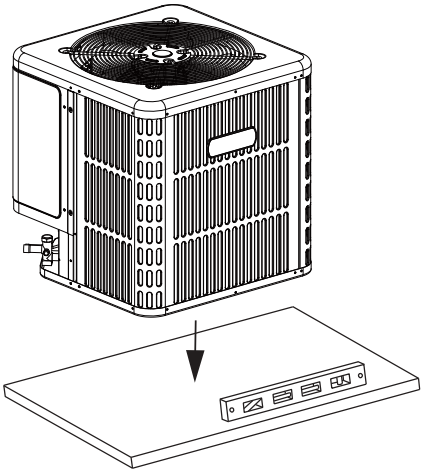

Figure 4-1

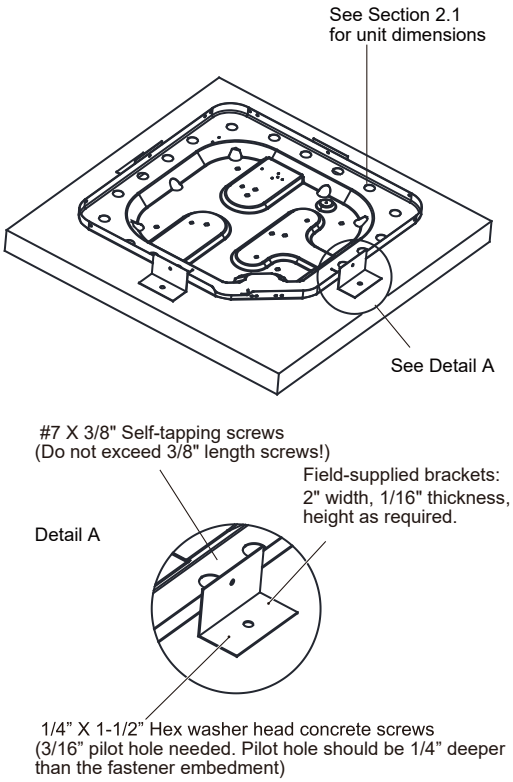

Figure 4-2

5 REFRIGERANT LINE CONSIDERATIONS

5.1 Service Valve Connection Sizes

Models	Suction line connection	Liquid line connection
18-60K	3/4	3/8

Table 5-1

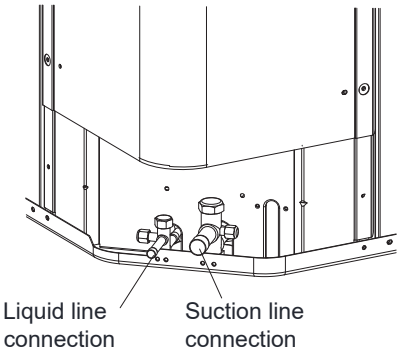

Figure 5-1

5.2 Refrigerant Line Insulation

NOTE

The suction line must always be insulated. DO NOT allow the Liquid Line and Suction Line to come in direct (metal to metal) contact.

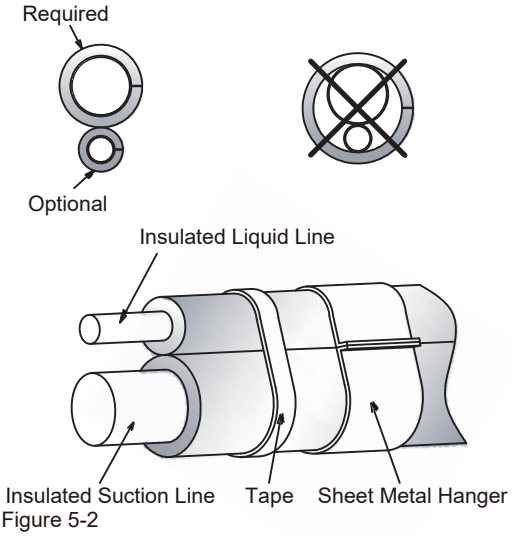

Figure 5-2

5.3 Reuse Existing Refrigerant Lines

⚠ CAUTION

If using existing refrigerant lines make certain that all joints are brazed, not soldered.

For retrofit applications, where the existing refrigerant lines will be used, the following precautions should be taken:

- Ensure that the size of the refrigerant lines is correct. Refer to Section 2.2 and Table 2-2.
- Ensure that the refrigerant pipe length is in the recommended range. Refer to Section 2.3 and Table 2-3.
- Ensure that the refrigerant lines are free of leaks, acid, and oil.
- Using existing lines that have been used with other refrigerants is not recommended.

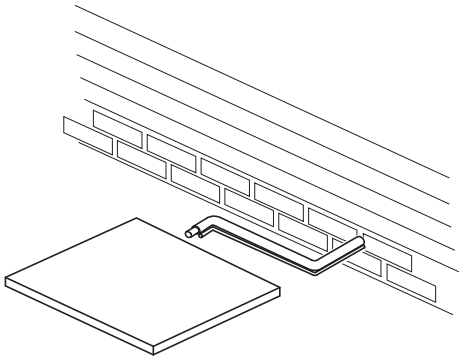

Figure 5-3

6 REFRIGERANT LINE ROUTING

6.1 Precautions

NOTE

Take precautions to prevent noise within the building structure due to vibration transmission from the refrigerant lines. For example:

- When the refrigerant lines have to be fastened to floor joists or other framing in a structure, use isolation type hangers.
- Isolation hangers should also be used when refrigerant lines are run in stud spaces or enclosed ceilings.
- Where the refrigerant lines run through a wall or sill, they should be insulated and isolated.
- Isolate the lines from all ductwork.
- Minimize the number of 90º turns.
- Use PVC piping as a conduit for all underground installations as shown in Figure 6-4 Buried lines should be keep as short as possible.
- The lines should not obstruct service access to the coil, air handling system or filter.
- Care must also be taken to isolate the refrigerant lines to minimize noise transmission from the equipment to the structure.

Comply with National, State, and Local codes when isolating linesets from joists, rafters, walls, or other structural elements.

⚠ WARNING

The pipe-work including piping material, pipe routing, and installation shall include protection from physical damage in operation and service, and be in compliance with national and local codes and standards, such as ASHRAE 15, ASHRAE 15.2, IAPMO Uniform Mechanical Code, ICC International Mechanical Code. Inspection prior to being covered or enclosed,or CSA B52. All field joints shall be accessible for inspection prior to being covered or enclosed.

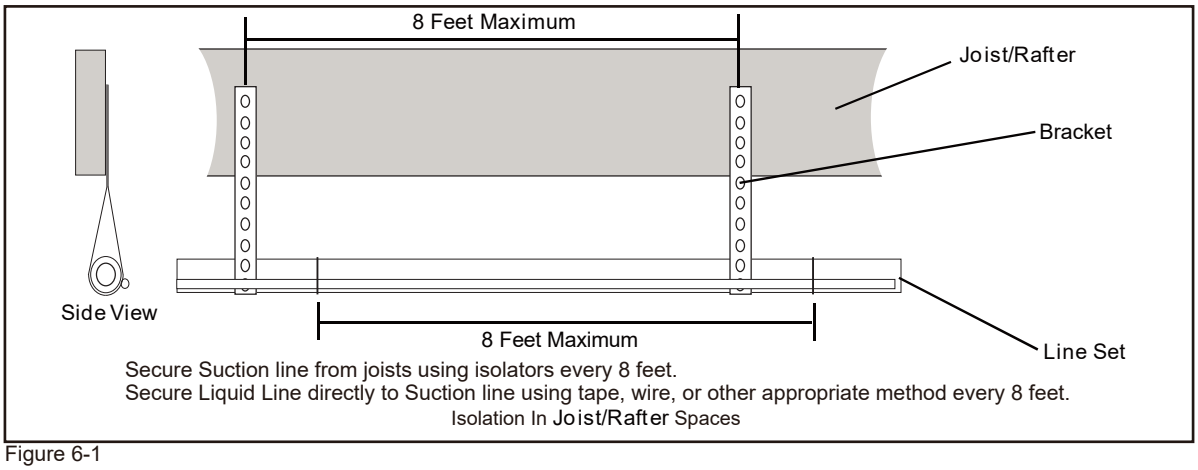

Figure 6-1

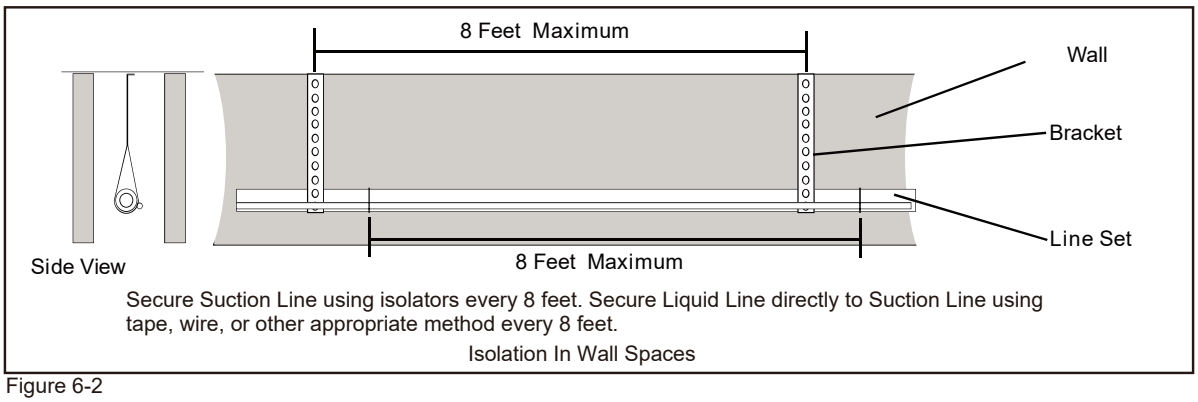

Figure 6-2

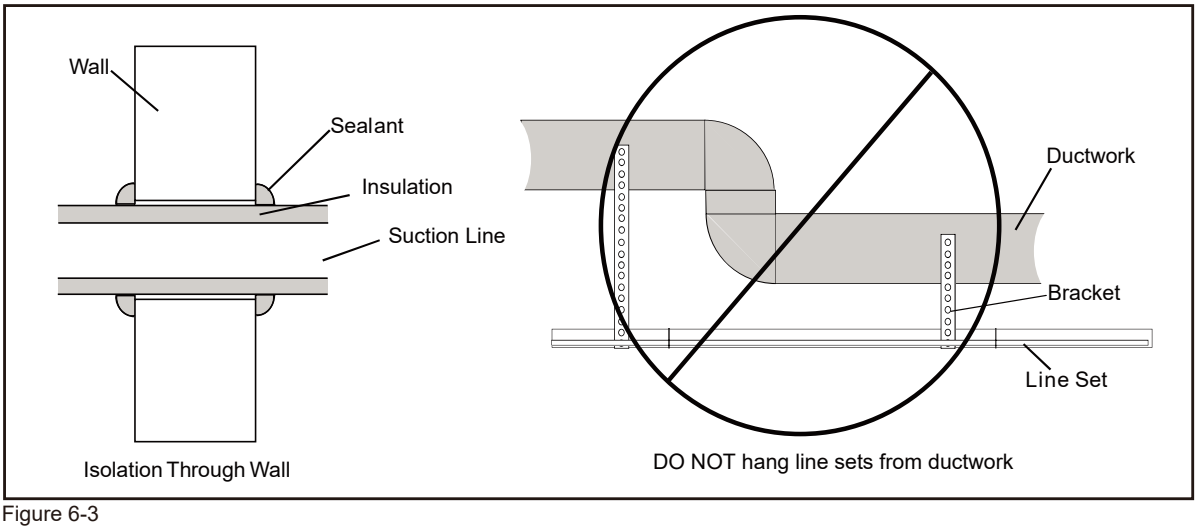

Figure 6-3

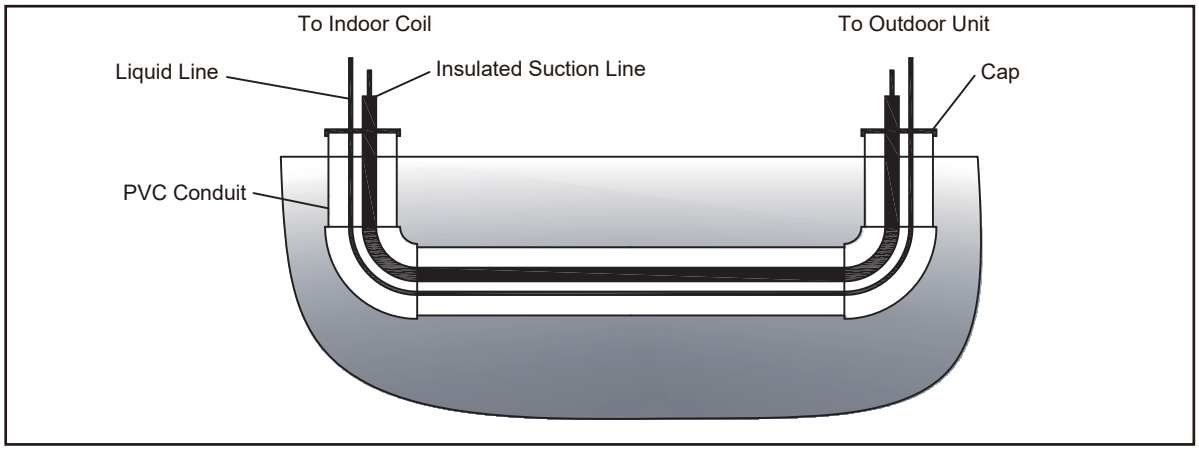

Figure 6-4

7 REFRIGERANT LINE CONNECTION

7.1 Connecting to Refrigerant Lines

⚠ WARNING

Pipe work and installation shall be in compliance with national codes ASHRAE15.

The installation of pipe-work shall be kept to a minimum.

It is recommended to install a filter dryer, the filter drier should be installed in the liquid line between the outdoor unit's liquid line service valve and the indoor coil's metering device. The filter dryer should compatible with R32 refrigerant.

All joints made in the installation between parts of the refrigerating system, with at least one part charged, shall be made in accordance with the following:

— A brazed, welded, or mechanical connection shall be made before opening the valves to permit refrigerant to flow between the refrigerating system parts. A vacuum valve shall be provided to evacuate the interconnecting pipe or any uncharged refrigerating system part.
— Mechanical connectors used indoors shall comply with ISO 14903. When mechanical connectors are reused indoors, sealing parts shall be renewed. When flared joints are reused indoors, the flare part shall be refabricated.
— Refrigerant tubing shall be protected or enclosed to avoid damage.
— Flexible refrigerant connectors (such as connecting lines between the indoor and outdoor unit) that may be displaced during normal operation shall be protected against mechanical damage.

Compliance is checked according to the installation instructions and a trial installation, if necessary.

Field-made refrigerant joints indoors shall be tightness tested. The test method shall have a sensitivity of 5 grams per year of refrigerant or better under a pressure of at least 0.25 times the maximum allowable pressure. No leak shall be detected.

For installations with field applied joints that are exposed in the occupied space, these joints shall be at least one of the following:

— Mechanical joints in compliance with ISO 14903 or UL 207 (U.S. only).
— Welded or brazed joints.
— Joints in enclosures that vent to the unit or to the outside.

Compliance is checked by inspection and tests.

8 REFRIGERANT LINE BRAZING

8.1 Braze the Refrigerant Lines

1. Remove caps or plugs. Use a deburing tool to debur the pipe ends. Clean both internal and external surfaces of the tubing using an emery cloth.

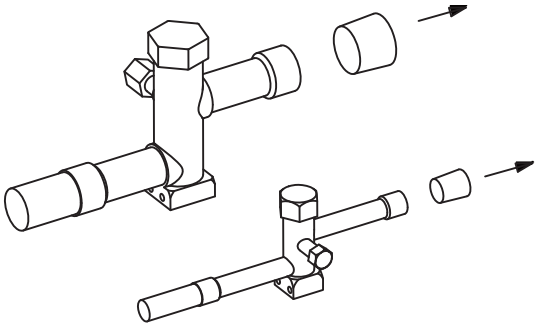

Figure 8-1

2. Remove the pressure tap cap from both service valves.

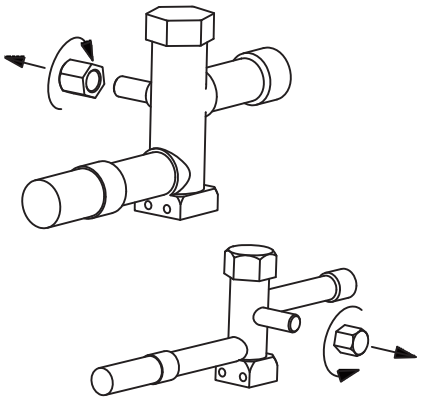

Figure 8-2

3. Purge the refrigerant lines and indoor coil with dry nitrogen.

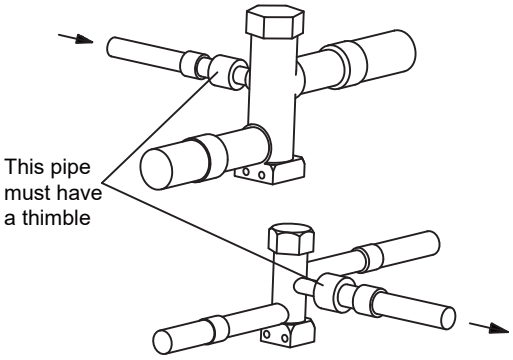

Figure 8-3

4. Wrap a wet rag around the valve body to avoid heat damage and continue the dry nitrogen purge (Fig. 8-4).

   Braze the refrigerant lines to the service valves.

   Check liquid line filter drier's directional flow arrow to confirm correct direction of refrigeration flow (away from outdoor unit and toward evaporator coil) as illustrated. Brazing the filter drier to the Liquid Line.

   Continue the dry nitrogen purge. Do not remove the wet rag until all brazing is completed.

NOTE

Remove the wet rag before stopping the dry nitrogen purge.

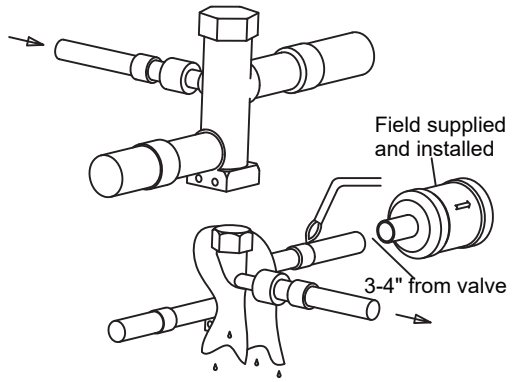

Figure 8-4

5. Replace the pressure tap caps after the service valves have cooled.

NOTE

Do not over tighen (between 40 and 60 inch-lb. maximum).

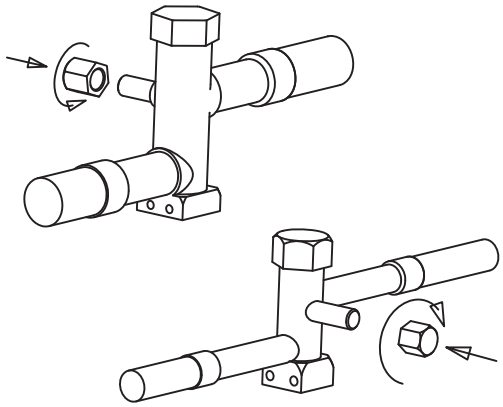

Figure 8-5

9 REFRIGERANT LINE LEAK CHECK

9.1 Check for Leaks

1. Pressurize the refrigerant lines and evaporator coil to 600 psig and hold the pressure for 1 hour using dry nitrogen.

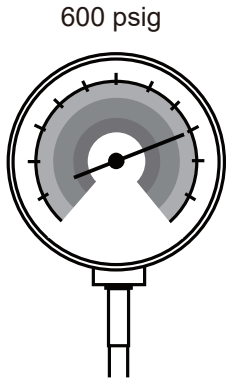

Figure 9-1

2. Check for leaks by using bubbles or refrigerant leak detector at each brazed location.

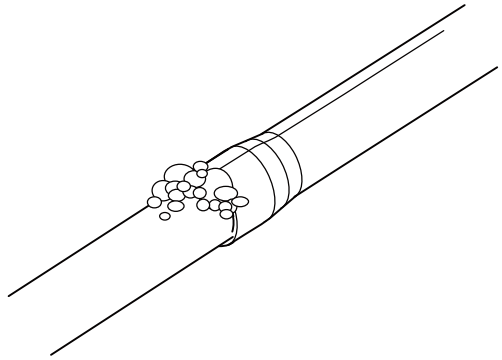

Figure 9-2

Remove nitrogren pressure and repair any leaks before continuing.

⚠ WARNING

After completion of field piping for split systems, the field pipework shall be pressure tested with an inert gas and then vacuum tested prior to refrigerant charging, according to the following requirements.
Entire line set and evaporator coil should hold 600 psig for 1 hour.
Field-made refrigerant joints indoors shall be tightness tested. The test method shall have a sensitivity of 5 grams per year of refrigerant or better under a pressure of at least 0,25 times the maximum allowable pressure. No leak shall be detected.

10 EVACUATION

10.1 Evacuate the Refrigerant Lines and Indoor Coil

NOTE

Do not open the service valves until the refrigerant lines and indoor coil leak check and evacuation are complete.

1. Evacuate until the micron gauge reads no higher than 350 microns, then close off the valve to the vacuum pump.

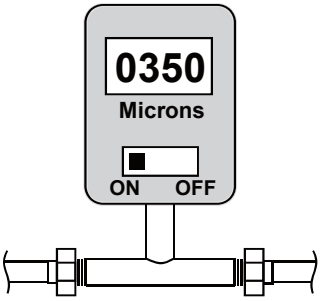

Figure 10-1

2. Observe the micron gauge. Evacuation is complete if the micron gauge does not rise above 500 microns in one (1) minute.

pump and micron gauge, and close the valves on the manifold gauge set.

Once evacuation is complete blank of

f the vacuum

Figure 10-2

11 ADDITIONAL CHARGE AND SERVICE VALVES

11.1 Additional Refrigerant

Some systems require additional charging depending on pipe lengths. The standard pipe length varies according to local regulations. For example, in North America, the standard pipe length is 7.5m (25'). In other areas, the standard pipe length is 5m (16').

The refrigerant should be charged from the service port on the outdoor unit's low pressure valve. The additional refrigerant to be charged can be calculated using the following formula:

	Liquid Line Diameter	
	φ6.35(1/4'')	φ9.52(3/8'')
R410a	(Total pipe length - standard pipe length)× 24g(0.27oZ)/m(ft)	(Total pipe length - standard pipe length)× 58g(0.63oZ)/m(ft)
R32	(Total pipe length - standard pipe length)× 20g(0.22oZ)/m(ft)	(Total pipe length - standard pipe length)× 48g(0.52oZ)/m(ft)

11.2 Open the Service Valves

⚠ WARNING

Extreme caution should be exercised when opening the Liquid Line Service Valve. Turn counterclockwise until the valve stem just touches the rolled edge. No torque is required. Failure to follow this warning will result in abrupt release of system charge and may result in personal injury or property damage.

NOTE

Leak check and evacuation must be completed before opening the service valves. The brazed line set valves should be used for leak checking and vacuuming. Using the separate suction port for this process will result in loss of charge.

The Suction Service Valve must be opened first BEFORE opening the Liquid Service Valve.

1. Remove Service Valve Cap (Fig. 11-1).
2. Fully insert hex wrench into the stem and back out counterclockwise until valve stem just touches the rolled edge (approximately five (5) turns.)
3. Replace the Valve Stem Cap to prevent leaks. Tighten finger tight plus an additional 1/6 turn.
4. Repeat STEPS 1 - 3 for Liquid Service Valve.

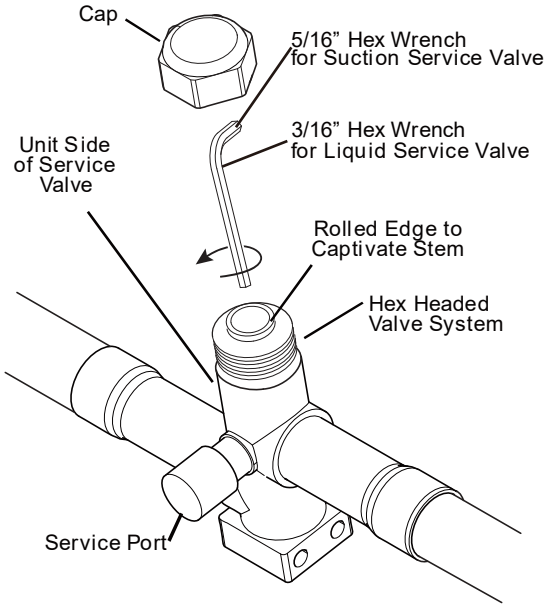

Figure 11-1

12 ELECTRICAL - LOW VOLTAGE

In the U.S.A., wiring must conform with current local, codes and the current National Electric Code (NEC). In Canada, wiring must conform with current local codes and the current Canadian Electrical Code (CEC).

⚠ WARNING

Installation and servicing of air conditioning equipment can be hazardous due to internal refrigerant pressure and live electrical components. Only trained and qualified service personnel should install or service this equipment. Installation and service performed by unqualified persons can result in property damage, personal injury, or death.

Risk of electrical shock. Disconnect all remote power supplies before installing or servicing any portion of the system.

Failure to disconnect power supplies can result in property damage, personal injury, or death.

⚠ CAUTION

Conventional 24VAC non-communicating thermostat control wires must be connected reliably and protected by insulation.
The wires unused should be insulated, and the copper wires should not be exposed. Sharp metal edges can cause injury.
When installing the unit, use care to avoid sharp edges. Avoid sharp metal edges for wires to prevent wear, or it may lead to short circuit or electric leakage and cause danger.

NOTE

Electrostatic discharge can affect electronic components. Take care during unit installation and service to protect the unit's electronic controls. Precautions will help to avoid control exposure to electrostatic discharge by putting the unit, the control and the technician at the same electrostatic potential. Touch hand and all tools on an unpainted unit surface before performing any service procedure to neutralize electrostatic charge.

Do not connect the power cords (high voltage) to the conventional 24VAC non-communicating thermostat control wires (low voltage), otherwise it will damage the control board.

Tighten the zip tie after connecting the wires to prevent small animals from entering the electric control box and causing damage.

The conventional 24VAC non-communicating thermostat control wires should be fixed well. Otherwise, the connectors may be loose or the terminal may be damaged when they are pulled.

Power cords and conventional 24VAC non-communicating thermostat control wires must be separated from each other with a distance of more than 2 inches. Otherwise, the communication may be abnormal.

The conventional 24VAC non-communicating thermostat control wires connectors are SELV connection points.

12.1 Low Voltage Maximum Wire Length

Table 12-1 defines the maximum total length of low voltage wiring from the outdoor unit to the indoor unit and to the thermostat.

24 Volts - Wire size	Max. Wire Length
18 AWG	150 Ft.
16 AWG	225 Ft.
14 AWG	300 Ft.

Table 12-1

12.2 Low Voltage Wiring

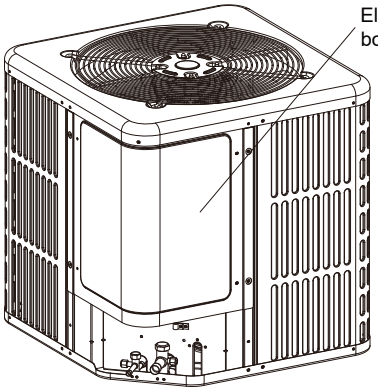

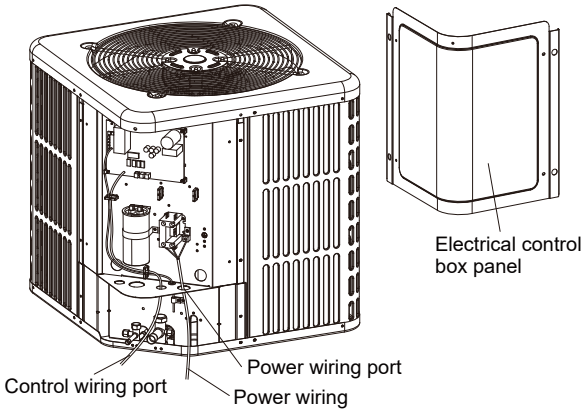

⚠ WARNING

Low Voltage line must be connected inside the outdoor unit case through control wiring channel on the right. High Voltage line must be connected through power wiring channel on the left. Mixed channel may result in personal injury. The electrical control box panel must be installed and the screws must be tightened.

Cooling-Only Model

Wiring for 1H and 1C thermostat (no heat pump system model)

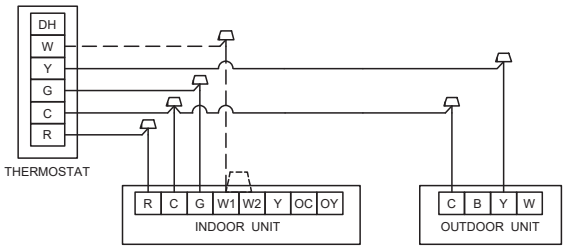

Connection method A

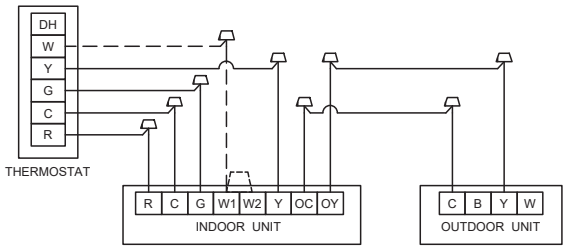

Connection method B (Optional)

Wiring for 1H and 1C thermostat (no heat pump system model)

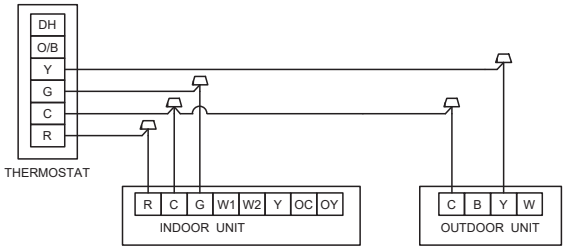

Connection method A

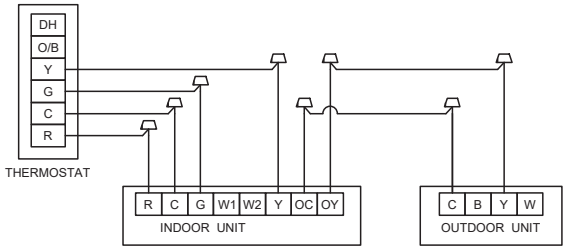

Connection method B (Optional)

Wiring for 2H and 1C thermostat (no heat pump system model)

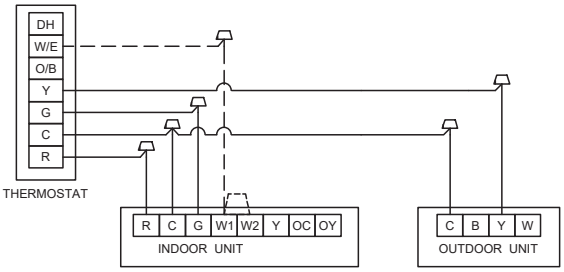

Connection method A

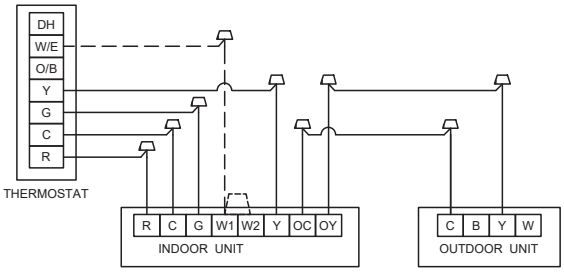

Connection method B (Optional)

Wiring for 2H and 2C thermostat (no heat pump system model)

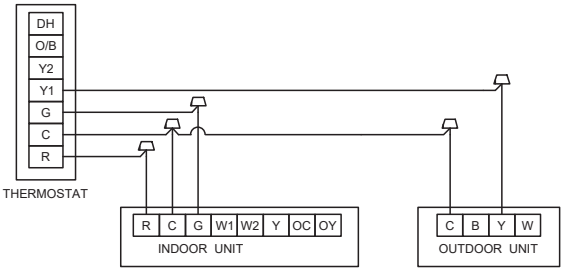

Connection method A

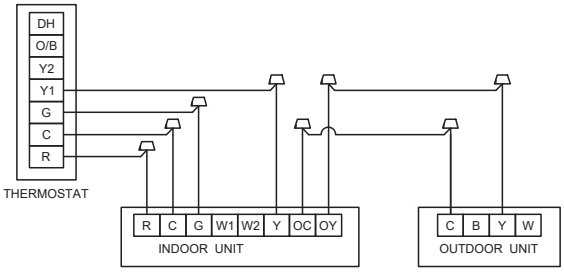

Connection method B (Optional)

Wiring for 3H and 1C thermostat (no heat pump system model)

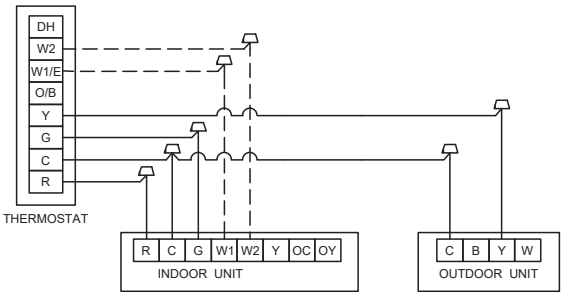

Connection method A

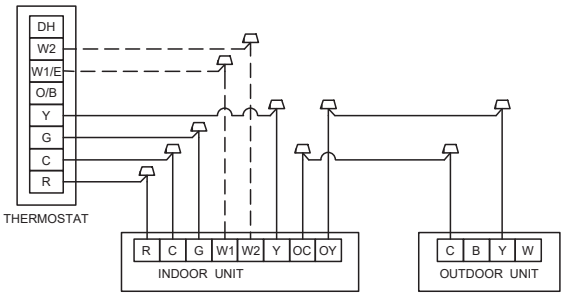

Connection method B (Optional)

Wiring for 3H and 2C thermostat (no heat pump system model)

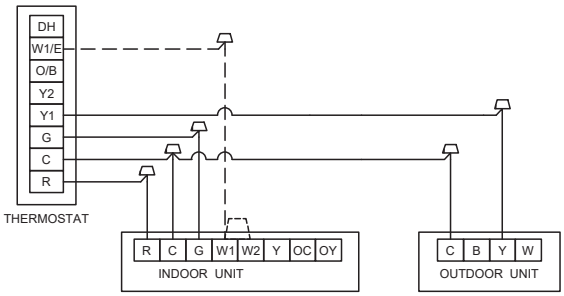

Connection method A

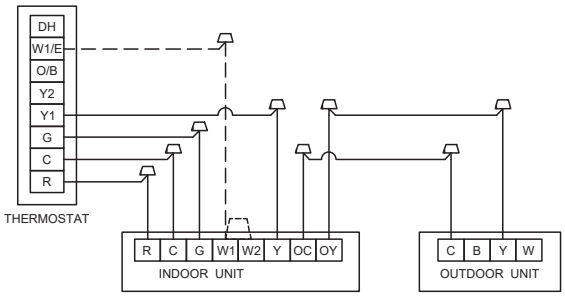

Connection method B (Optional)

Wiring for 4H and 2C thermostat (no heat pump system model)

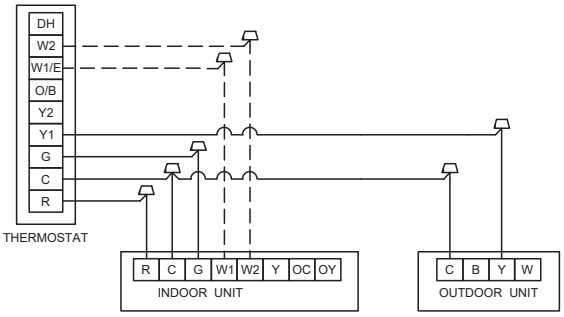

Connection method A

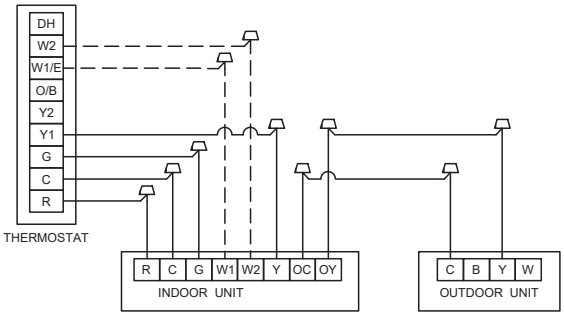

Connection method B (Optional)

Dashed lines in the above thermostat wiring diagrams refer to optional wiring (Electric Heat). For thermostat wiring please refer to the Owner's Manual of the thermostat.

Control Logic For Cooling-only Model

Indoor unit connector

Connector	Purpose
R	24V Power Connection
C	Common
G	Fan Control
W1	Stage 1 Electric Heating
W2	Stage 2 Electric Heating
Y	Cooling
OC	Optional Output Signal C To Outdoor Unit
OY	Optional Output Signal Y To Outdoor Unit

Outdoor unit connector

Connector	Purpose
C	Common
Y	Cooling

Low Voltage Maximum Wire Length

Table defines the maximum total length of low voltage wiring from the outdoor unit to the indoor unit and to the thermostat.

24 Volts - Wire size	Max. Wire Length
18 AWG	150 Ft.
16 AWG	225 Ft.
14 AWG	300 Ft.

Table

Cooling/Heating Model

Wiring for 1H and 1C thermostat (heat pump system model)

Note:Because Y1 and Y2 are jumped, the indoor fan will only run in high stage.

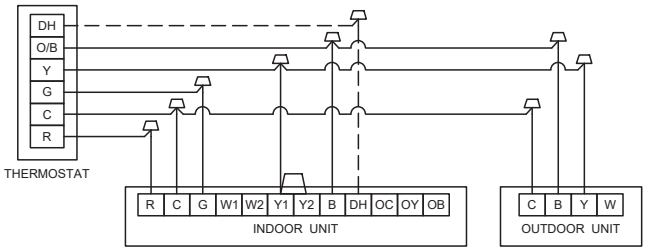

Connection method A

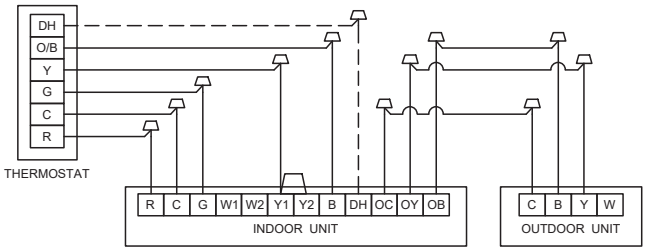

Connection method B (Optional)

Wiring for 2H and 1C thermostat (heat pump system model)

Note1:Because Y1 and Y2 are jumped, the indoor fan will only run in high stage.
Note2: Any time the electric heat elements are active. the indoor fan will run in high stage.

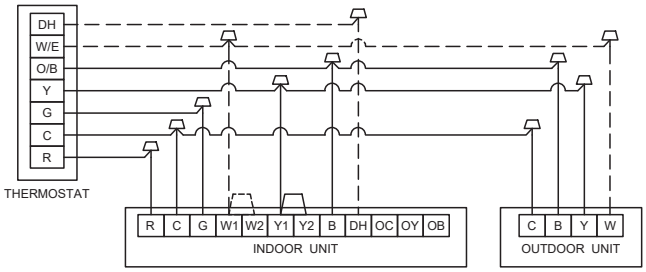

Connection method A

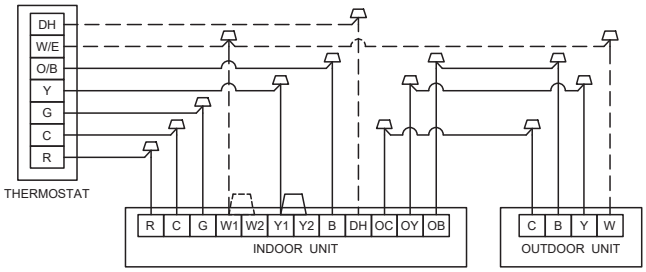

Connection method B (Optional)

Wiring for 2H and 2C thermostat (heat pump system model)

Note:Y1 and Y2 here represents 2 stages of fan cooling only, the compressor modulates separately from the fan.

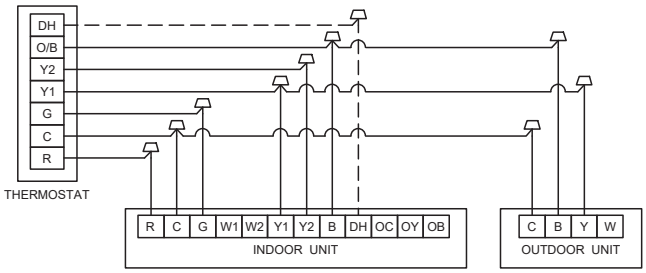

Connection method A

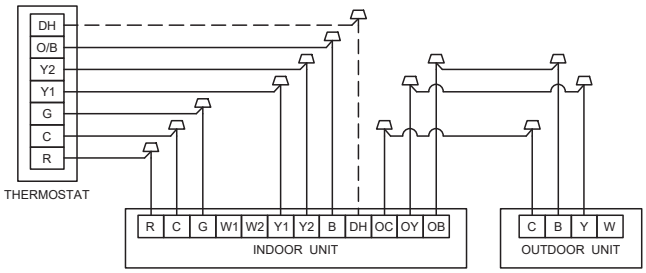

Connection method B (Optional)

Wiring for 3H and 1C thermostat (heat pump system model)

Note1:Because Y1 and Y2 are jumped, the indoor fan will only run in high stage.
Note2: Any time the electric heat elements are active. the indoor fan will run in high stage.

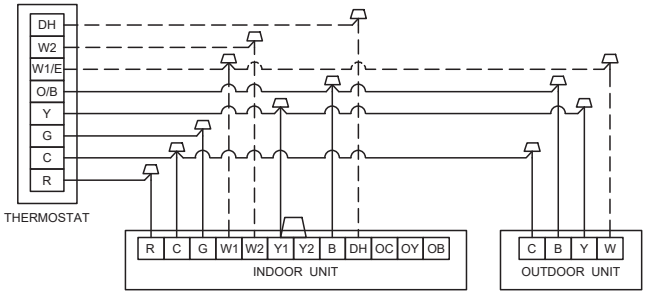

Connection method A

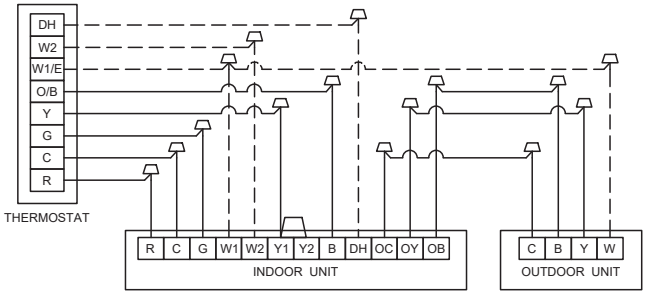

Connection method B (Optional)

Wiring for 3H and 2C thermostat (heat pump system model)

Note1:Y1 and Y2 here represents 2 stages of fan cooling only, the compressor modulates separately from the fan.
Note2: Any time the electric heat elements are active. the indoor fan will run in high stage.

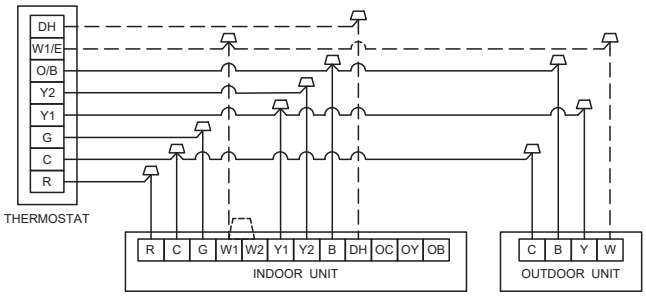

Connection method A

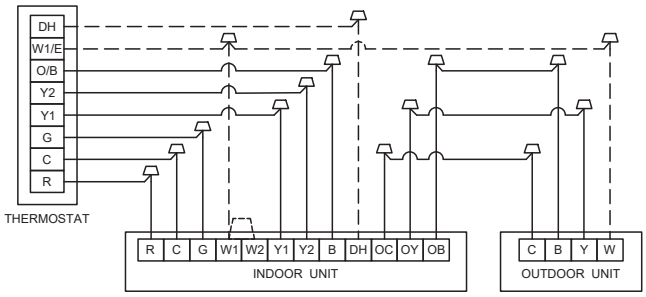

Connection method B (Optional)

Wiring for 4H and 2C thermostat (heat pump system model)

Note1:Y1 and Y2 here represents 2 stages of fan cooling only, the compressor modulates separately from the fan.

Note2: Any time the electric heat elements are active. the indoor fan will run in high stage.

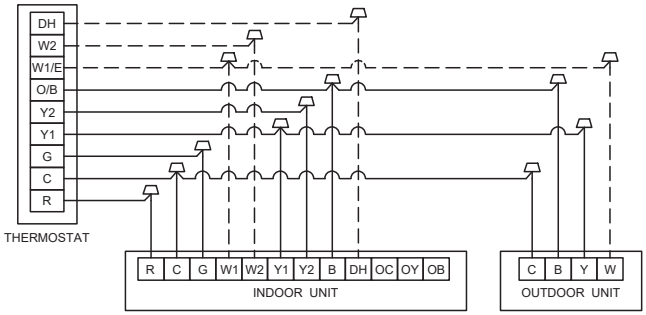

Connection method A

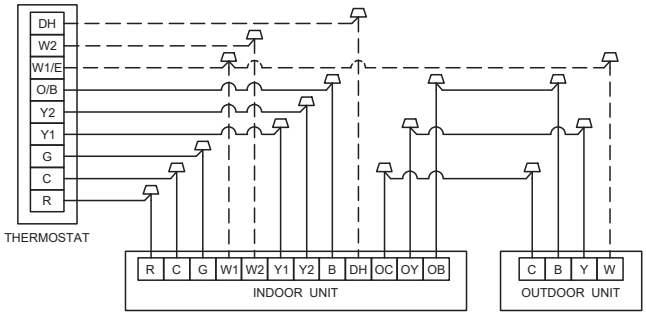

Connection method B (Optional)

Dh wiring is optional and requires a thermostat with a humidistat. Dh functions as Passive Dehumidifi cation and will downstage the indoor fan to first stage. System will operate according to normal sequence of operations if Dh wiring is absent.

Dashed lines in the above thermostat wiring diagrams refer to optional wiring (wiring for Passive Dehumidifi cation Function and/OR Electric Heat). For thermostat wiring please refer to the Owner's Manual of the thermostat.

B wire must be used with heat pump system only, the reversing valve energizes in heating.

Control Logic For Cooling / Heating Model

Indoor unit connector

Connector	Purpose
R	24V Power Connection
C	Common
G	Fan Control
Y1	Low Cooling
Y2	High Cooling
B	Heating Reversing Valve
W1	Stage 1 Electric Heating
W2	Stage 2 Electric Heating
DH	Dehumidification
OC	Optional Output Signal C To Outdoor Unit
OY	Optional Output Signal Y To Outdoor Unit
OB	Optional Output Signal B To Outdoor Unit

Outdoor unit connector

Connector	Purpose
C	Common
Y	Cooling
B	Heating Reversing Valve
W	Defrost control

Low Voltage Maximum Wire Length

Table defines the maximum total length of low voltage wiring from the outdoor unit to the indoor unit and to the thermostat.

24 Volts - Wire size	Max. Wire Length
18 AWG	150 Ft.
16 AWG	225 Ft.
14 AWG	300 Ft.

Table

13 ELECTRICAL - HIGH VOLTAGE

In the U.S.A., wiring must conform with current local codes and the current National Electric Code (NEC). In Canada, wiring must conform with current local codes and the current Canadian Electrical Code (CEC).

⚠ WARNING

Installation and servicing of air conditioning equipment can be hazardous due to internal refrigerant pressure and live electrical components. Only trained and qualified service personnel should install or service this equipment. Installation and service performed by unqualified persons can result in property damage, personal injury, or death.

Risk of electrical shock. Disconnect all remote power supplies before installing or servicing any portion of the system. Failure to disconnect power supplies can result in property damage, personal injury, or death.

Fire Hazard. Use of aluminum wire with this product may result in a fire, causing property damage, severe injury or death. Use copper wire only with this product.

Can cause injury or death. Unit must be properly grounded in accordance with national and local codes.

Natural grounding poles embedded in the ground can be used, but do not connect the ground wire to the following locations:

(a) Pipes of flammable or explosive gases, which may lead to an explosion or fire.

(b) Insulated plastic pipes, otherwise there is no

grounding effect.

(c) Telephone line or lightning rod, otherwise it will be dangerous for increasing the ground potential during lightning strikes.

During installation, testing, servicing, and trouble-shooting of this product, it may be necessary to work with live electrical components. Failure to follow all electrical safety precautions when exposed to live electrical components could result in death or serious injury.

⚠ CAUTION

Sharp metal edges can cause injury. When installing the unit, use care to avoid sharp edges.

Avoid sharp metal edges for wires to prevent wear, or it may lead to short circuit or electric leakage and cause danger.

Wires should be fixed well. Otherwise, the connectors may be loose or the terminal may be damaged when they are pulled.

NOTE

Electrostatic discharge can affect electronic components. Take care during unit installation and service to protect the unit's electronic controls. Precautions will help to avoid control exposure to electrostatic discharge by putting the unit, the control and the technician at the same electrostatic potential. Touch hand and all tools on an unpainted unit surface before performing any service procedure to neutralize electrostatic charge.

Do not add phase junction capacitors, otherwise it may cause serious damage to the product.

Do not start the unit before installing line-sets and opening service valves.

Otherwise, the compressor will be damaged.

13.1 High Voltage Power Supply

The high voltage power supply must match the equipment nameplate (208/230V~, 1PH, 60Hz).

13.2 High Voltage Disconnect Switch and Breaker

Refer to the unit nameplate for minimum circuit ampacity, and maximum fuse or circuit breaker (HACR TYPE per NEC). Install power cords and properly sized disconnect switch and breaker.

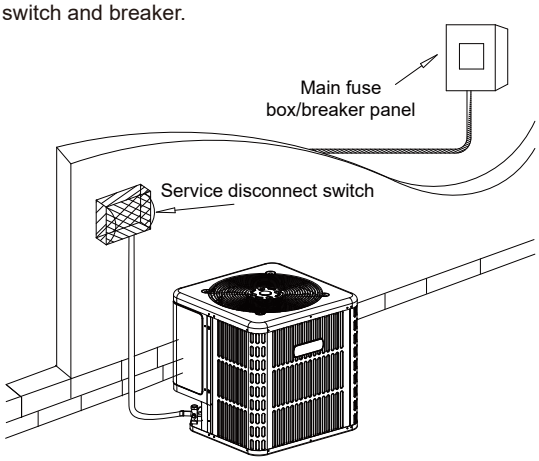

Figure 13-1

Wire gauge of high voltage system

Type (Btu/ hour)			18K	24/30K	36K	42/48/60K
Power		Phase	Single			
		Voltage/frequency	208/230VAC, 60 Hz			
Wire gauge	Outdoor unit power cord	Line quantity	3	3	3	3
		Wire diameter (AWG)	14	12	10	8

13.3 High Voltage Wiring

1. Remove the electrical control box panel. Refer to Figure 13-2.

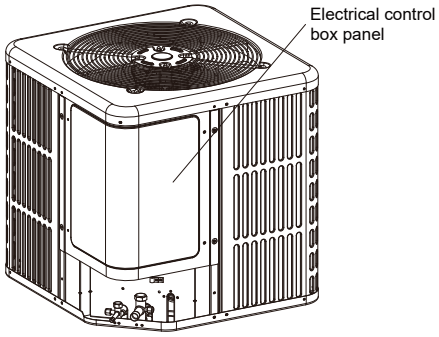

Figure 13-2

2. Firstly thread the power cords (L1, L2) and ground wire through the power cords hole. Secondly connect L1, L2 and ground wire to terminals of the AC contactor properly one by one. Finally fasten the pipe of the power cords and ground wire. Refer to Figure 13-3.

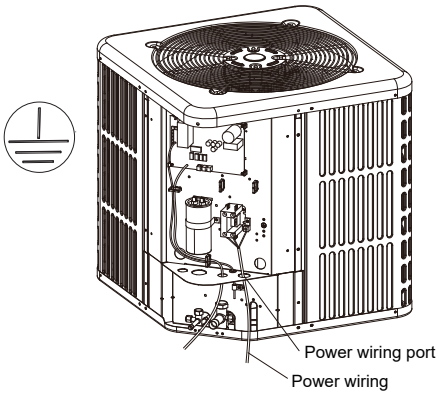

Figure 13-3

NOTE

Refer to the unit wiring diagram located on the inside of the electrical control box panel.

During installation, the ground wire should be longer than the power cords to ensure that the ground wire can be grounded reliably when the fixed device is loose.

The above pictures are for indication, the actual object may be different.

14 START UP

14.1 System Start Up

1. Ensure Sections 7, 8, 9, 10, 11, 12, 13, have been completed. Check the electrical wiring again, and check whether the DIP switch meets the requirements according to the wiring diagram on the electrical control box panel.

2. Set System Thermostat to OFF.

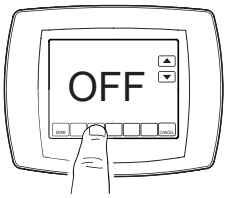

Figure 14-1

3. Check voltage supply at the disconnect switch. The voltage must be within the range listed on the unit nameplate. If not, do not start appliance until the power company has been consulted and the voltage condition corrected.Turn on disconnect to apply power to the indoor and outdoor units.

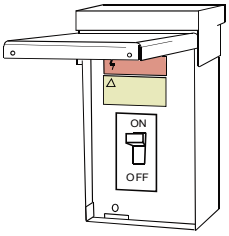

Figure 14-2

4. Wait one (1) hour before starting the unit if compressor crankcase heater is used and the outdoor ambient temperature is below 70 ºF.

Figure 14-3

5. Set system thermostat to ON.

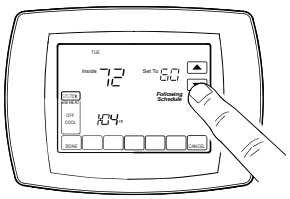

Figure 14-4

15 ERROR CODE TABLE

Self diagnosis error code table (Outdoor unit display)

	LED Display	System Status
Operating Mode	Green Light: Steadily On Red Light: Off	Standby
		Cooling
		Heating
System Alert	Green Light: Flashes 1 Time Red Light: Off	Low Pressure Alert
	Green Light: Flashes 2 Times Red Light: Off	High Pressure Alert
	Green Light: Flashes 3 Times Red Light: Off	T5 Exhaust Over-temperature Protection
	Green Light: Flashes 4 Times Red Light: Off	TH Anti-freeze Protection Fault
	Green Light: Flashes 5 Times Red Light: Off	T4 Ambient Temperature Protection
	Green Light: Flashes 6 Times Red Light: Off	T3 Over-temperature Protection
	Green Light: Off Red Light: Flashes 1 Time	T3 Sensor Error
	Green Light: Off Red Light: Flashes 2 Times	T4 Sensor Error
	Green Light: Off Red Light: Flashes 3 Times	T5 Sensor Error
	Green Light: Off Red Light: Flashes 4 Times	TH Sensor Error
System Lockout	Green Light: Off Red Light: Flashes 5 Times	6 Low Pressure Faults within 60 Mins
	Green Light: Off Red Light: Flashes 6 Times	3 Exhaust Over-temperature Faults within 60 Mins
	Green Light: Off Red Light: Flashes 7 Times	8 TH Anti-freeze Faults within 200 Mins

16 SERVICE

Assist owner with processing Warranty cards.

16.1 Maintenance

Dirt should not be allowed to accumulate on the indoor or outdoor coils or other parts in the air circuit. Clean as often as necessary to keep the unit clean. Use a brush, vacuum cleaner attachment or other suitable means.

The outdoor fan motor is permanently lubricated and does not require periodic oiling.

Refer to the furnace or air handler instructions for filter and blower motor maintenance.

The indoor coil and drain pan should be inspected and cleaned regularly to assure proper drainage.

NOTE

It is unlawful to knowingly vent, release or discharge refrigerant into the open air during repair, service, maintenance or the final disposal of this unit. When the system is functioning properly and the owner has been fully instructed, secure the owner's approval.

16.2 Changing Motor

When motor requires changing, follow the steps below:

STEP 1 - Go into electrical panel, disconnect motor power lines.

Note: Disconnect main power to unit. Severe burns and electrical shock will occur if you do not disconnect main power.

STEP 2 - Remove cover (be careful of motor wires).

STEP 3 - Be sure to place fan cover unit on the ground (Fig.17-1).

Note: Do not place or lean fan blades on ground or against surface.

STEP 4 - Remove fan motor by removing cap nuts from cover.

STEP 5 - Remove fan blade from motor by removing nut and washers, then place fan on the ground.

STEP 6 - Reverse removal process to reinstall the fan and motor.

Note: When connecting motor wires be sure to check motor direction.

NOTE

Damage will occur to condenser unit if you remove cap nuts prior to cover removal.

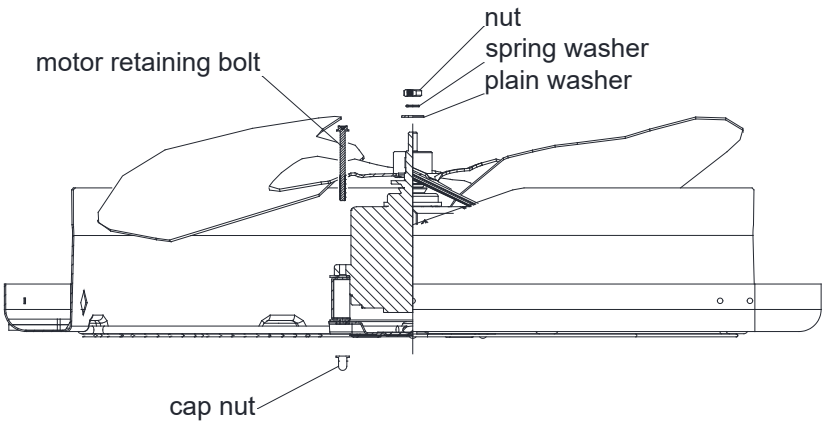

Figure 17-1

17 WIRING DIAGRAMS

Cooling-Only Model

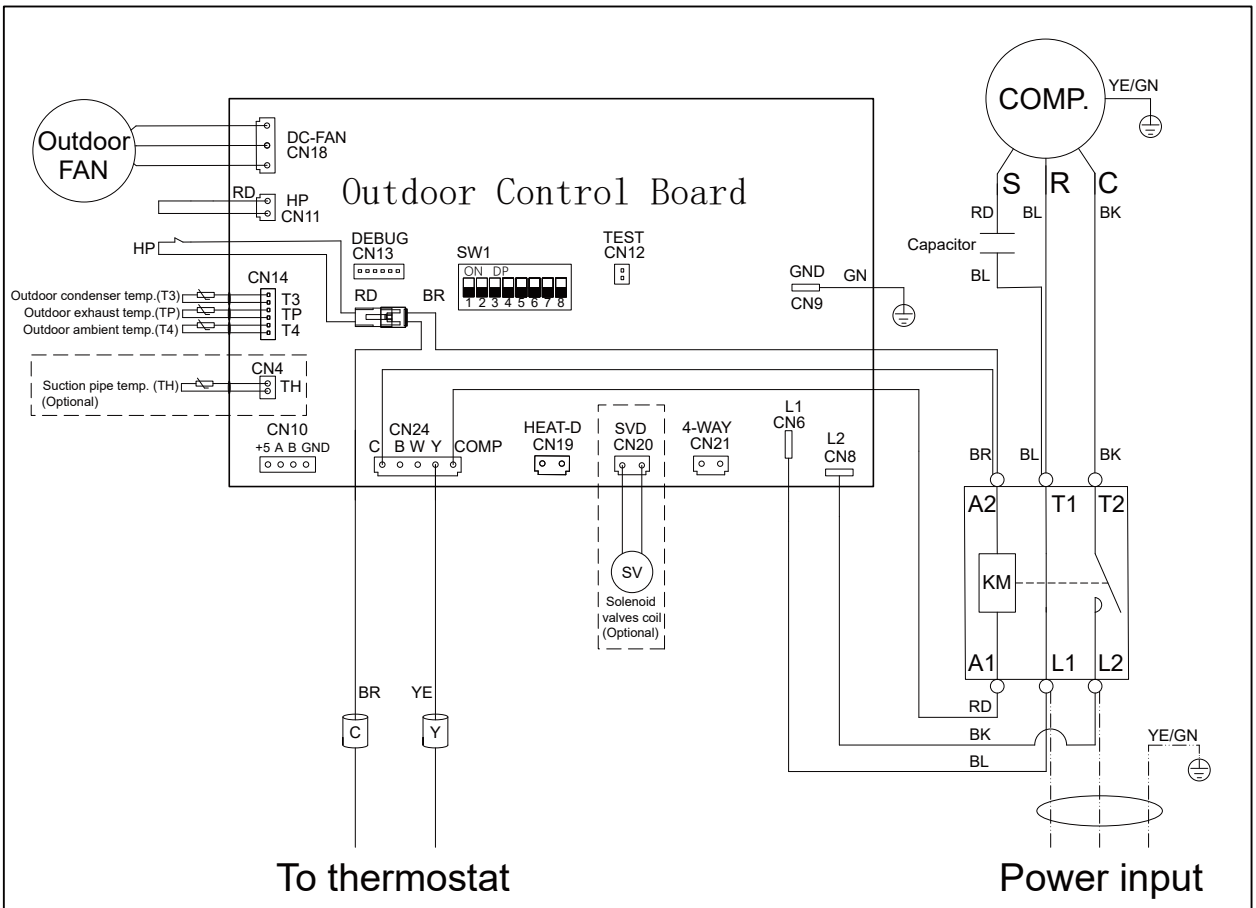

Note: 18k 24k 30k 36k models should connect Solenoid valves coil

LINE ANNOTATION	Wire Color Code	DIP switch status Indicate	Outdoor Display Board SW1 DIP switch selection	Outdoor Display Board SW1 DIP switch selection
Factory wiring	RD RED OR ORANGE BL BLUE GN GREEN BR BROWN GY GRAY BK BLACK YE YELLOW WH WHITE PR PURPLE	ON OFF 1 This Indicate OFF (The DIP switch is dialed to the digital side)	SW1.1 OFF 24V Control (Default) SW1.1 ON RS485 Comm. Mode SW1.2 OFF Heating and cooling SW1.2 ON Single-cooled (Default)	SW1.5 OFF Reserved (Default) SW1.5 ON Manual Defrosting SW1.6 OFF Auto Defrosting (Default) SW1.6 ON Periodically Defrosting
Field install		ON OFF 1 This Indicate ON (The DIP switch is dialed to the non-digital side)	SW1.3 OFF SW1.4 OFF Model 18K SW1.3 OFF SW1.4 ON Model 24K 30K 36K 42K SW1.3 ON SW1.4 OFF Model Reserved SW1.3 ON SW1.4 ON Model 48K 60K	SW1.7 OFF Defrost interval 60 minutes (Default) SW1.7 ON Defrost interval 30 minutes SW1.8 OFF Gerenal mode (Default) SW1.8 ON High vertical mode
Dashed box				

Cooling/Heating Model

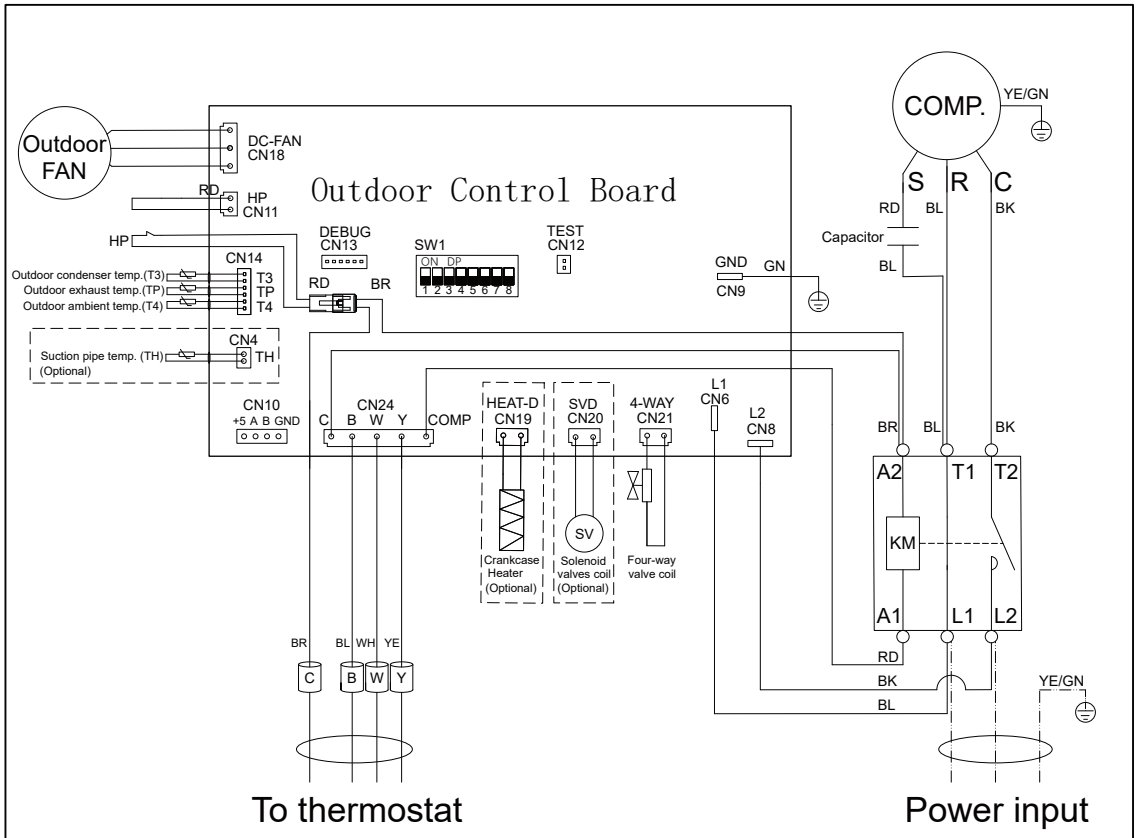

Note: 18k 24k 30k 36k models should connect Solenoid valves coil

LINE ANNOTATION	Wire Color Code	DIP switch status Indicate		Outdoor Display Board SW1 DIP switch selection						Outdoor Display Board SW1 DIP switch selection		
Factory wiring	RD RED OR ORANGE	ON OFF 1	This Indicate OFF (The DIP switch is dialed to the digital side)	SW1.1	OFF	24V Control (Default)				SW1.5	OFF	Reserved (Default)
	BL BLUE GN GREEN				ON	RS485 Comm. Mode					ON	Manual Defrosting
	BR BROWN GY GRAY			SW1.2	OFF	Heating and cooling (Default)				SW1.6	OFF	Auto Defrosting (Default)
Field install	BK BLACK YE YELLOW				ON	Single-cooled					ON	Periodically Defrosting
	WH WHITE PR PURPLE	ON OFF 1	This Indicate ON (The DIP switch is dialed to the non-digital side)	SW1.3	OFF	SW1.4	OFF	Model	18K	SW1.7	OFF	Defrost interval 60 minutes (Default)
Dashed box					OFF		ON		24K 30K 36K 42K		ON	Defrost interval 30 minutes
					ON		OFF		Reserved	SW1.8	OFF	Gerenal mode (Default)
					ON		ON		60K		ON	High vertical mode

18 CHECKLIST

Operational and Checkout Procedures

Final phases of this installation are the unit Operational and Checkout Procedures. To obtain proper performance, all units must be operated and charge adjustments made in accordance with procedures found in the Service Facts of the Outdoor Unit.

After installation has been completed, it is recommended that the entire system be checked against the following list:

1. Be sure unit suspension(if used) is secure and that there are no tools or loose debris in or around or on top of the unit ···· [ ]
2. Properly insulate suction lines and fittings ···· [ ]
3. Properly secure and isolate all refrigerant lines ···· [ ]
4. Verify that all electrical connections are tight ···· [ ]
5. Check all duct outlets; they must be open and unrestricted ···· [ ]
6. Check drain lines and be sure all joints are tight ···· [ ]
7. Be sure that a return air filter is installed ···· [ ]
8. Operate complete system in each mode to verify proper performance. Verify operation of supplementary electric heater·· [ ]

19 DISPOSAL

Comply with national regulations.

Components and accessories from the units are not part of ordinary domestic waste.

Complete units, compressors, motors etc. are only to be disposed of via qualified disposal specialists.

This unit uses flammable refrigerant R32. Please contact the dealer when you want to dispose of this unit. Law requires that the collection, transportation and disposal of refrigerants must conform with the regulations governing the collection and destruction of hydrofluorocarbons.

ACiQ

The design and specifications are subject to change without prior notice for product improvement. Consult with the sales agency or manufacturer for details. Any updates to the manual will be uploaded to the service website, please check for the latest version.