FCM
COMMUNICATING FAN COIL for R-410A REFRIGERANT
SIZES 24, 36, 48, 60

Installation Instructions

NOTE: Read the entire instruction manual before starting the installation.

Table of Contents

Safety Considerations 1
Introduction. 2
Installation 2
Check Equipment. 2
Mount Fan Coil 2
Modular Units 4
Upflow Installation 4
Downflow Installation 4
Horizontal Installation 5
Air Ducts. 6
Duct Work Acoustical Treatment 6
Electrical Connections 6
Line Voltage Connections 6
24V Control System Connections to Unit Printed-Circuit Board . 6
Manufactured Housing. 7
Ground Connections 7
Refrigerant Tubing Connection and Evacuation 7
Condensate Drains 8
Unit Start-Up. 9
Low-Voltage Circuit Fusing and Reference 9
Accessory Installation. 9
Accessory Electric Heaters 9
Hydronic Heat Applications. 9
Outdoor Air Thermistor (OAT) 9
Electronic Air Cleaner Connections 9
Humidifier Connections. 9
System Shutdown Accessories. 9
Generator 9
Ventilation Accessory 9
Start-Up and Troubleshooting 10
LED Description:. 10
Fan Coil Control Start-Up and System Communications Trouble-shooting:. 10
ECM Motor Troubleshooting. 11
Using Motor LED in Troubleshooting. 11
Fan Coil Troubleshooting 11
Emergency Heating and Cooling Modes 13
Fan Coil Sequence of Operation. 13
Care and Maintenance 13

Safety Considerations

⚠ WARNING

ELECTRICAL OPERATION HAZARD

Failure to follow this warning could result in personal injury or death.

Consult a qualified installer, service agency, or your distributor or branch for information or assistance. The qualified installer or agency must use factory-authorized kits or accessories when modifying this product. Refer to the individual instructions packaged with kits or accessories when installing.

Follow all safety codes. Wear safety glasses, protective clothing and work gloves. Have a fire extinguisher available. Read these instructions thoroughly and follow all warnings or cautions included in literature and attached to the unit. Consult local building codes and the current editions of the National Electrical Code (NEC) NFPA 70.

In Canada, refer to the current editions of the Canadian Electrical Code CSA C22.1.

Recognize safety information. This is the safety-alert symbol ⚠. When you see this symbol on the unit and in instruction manuals, be alert to the potential for personal injury.

Understand the signal words **DANGER**, **WARNING**, and **CAUTION**. These words are used with the safety-alert symbol. **DANGER** identifies the most serious hazards which **will** result in severe personal injury or death. **WARNING** signifies hazards which **could** result in personal injury or death. **CAUTION** is used to identify unsafe practices which **may** result in minor personal injury or product and property damage. **NOTE** is used to highlight suggestions which **will** result in enhanced installation, reliability, or operation.

⚠ WARNING

ELECTRICAL OPERATION HAZARD

Failure to maintain proper clearances could result in personal injury or death.

Before installing or servicing unit, always turn off all power to unit. There may be more than 1 disconnect switch. Turn off accessory heater power if applicable.

⚠ CAUTION

HOT TUBE WARNING

Failure to follow this caution could result in personal injury and/or property damage.

Refrigerant lines can reach or exceed 130 °F (54 °C). Avoid contact with the vapor header or vapor line, especially in Heating Mode.

Introduction

Model FCM fan coils are designed to be installed with a communicating User Interface. The FCM fan coils will provide airflow at a rate commanded by the User Interface. The nominal airflow/ton rate is 350 CFM/ton. The User Interface will modify the commanded airflow under certain operating modes. Refer to the User Interface literature for further system control details. This fan coil will not respond to commands from a common thermostat except under certain emergency situations explained in this document. The instructions contained herein provide guidance to successfully install this fan coil.

Model FCM fan coil units are designed for flexibility and can be used for upflow, horizontal, or downflow applications. These units are designed specifically for R-410A refrigerant and must be used only with applicable refrigerant air conditioners and heat pumps as shipped.

These units leave the factory compliant with low leak requirements of less than 2% cabinet leakage rate at 0.5 inches W.C. and 1.4% cabinet leakage rate at 0.5 inches W.C. when tested in accordance with ASHRAE 193 standard. Because of this, units need special attention in the condensate pan and drain connection area and when brazing tubing.

These units are available for application in systems of 18,000 through 60,000 Btuh nominal cooling capacities. Factory-authorized, field-installed electric heater packages are available in 5 through 30 kW. See Product Data for available accessory kits.

Installation

Check Equipment

Unpack unit and move to final location. Remove carton taking care not to damage unit.

Inspect equipment for damage prior to installation. File claim with shipping company if equipment is damaged or incomplete. Locate unit rating plate which contains proper installation information. Check rating plate to be sure unit matches job specifications.

NOTE: If the door gasket is damaged or missing, the unit may not meet the ASHRAE 193 standard for cabinet air leakage. See the Product Data for this model or contact your supplier to order the gasket kit..

Mount Fan Coil

FCM units can stand or lie on floor, or hang from ceiling or wall. Allow space for wiring, piping, proper trapping and servicing unit.

IMPORTANT: When unit is installed over a finished ceiling and/or living area, building codes may require a field-supplied secondary condensate pan to be installed under the entire unit. Some localities may allow as an alternative, the running of a separate, secondary condensate line. Consult local codes for additional restrictions or precautions.

NOTE: Nuisance sweating may occur if the unit is installed in a high humidity environment with low airflow.

FCM fan coils can be installed for upflow and horizontal-left applications as factory shipped (Fig. 1, Fig. 2, Fig. 3), and FCM may be converted for downflow applications using factory-authorized accessory kits.

NOTE: To ensure proper drainage for horizontal installations, unit must be installed so it is within 1/8" / 3.18 mm level of the length and width of unit.

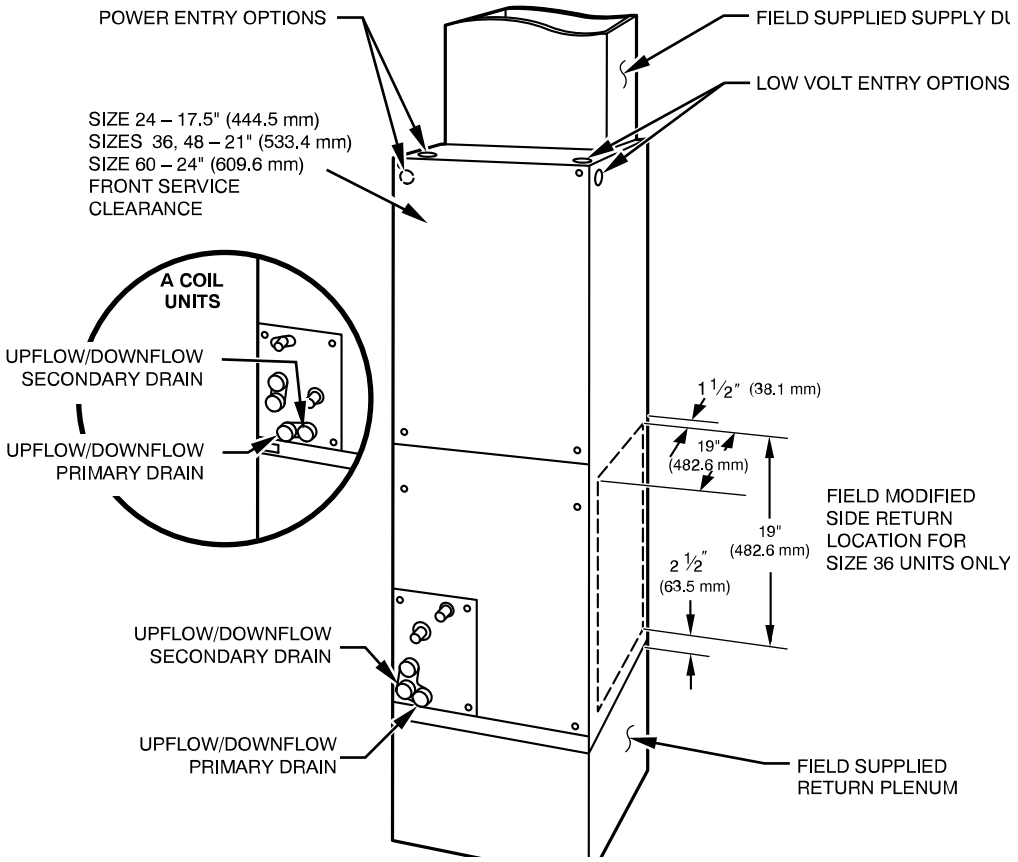

Fig. 1 – Slope Coil Unit in Upflow Application

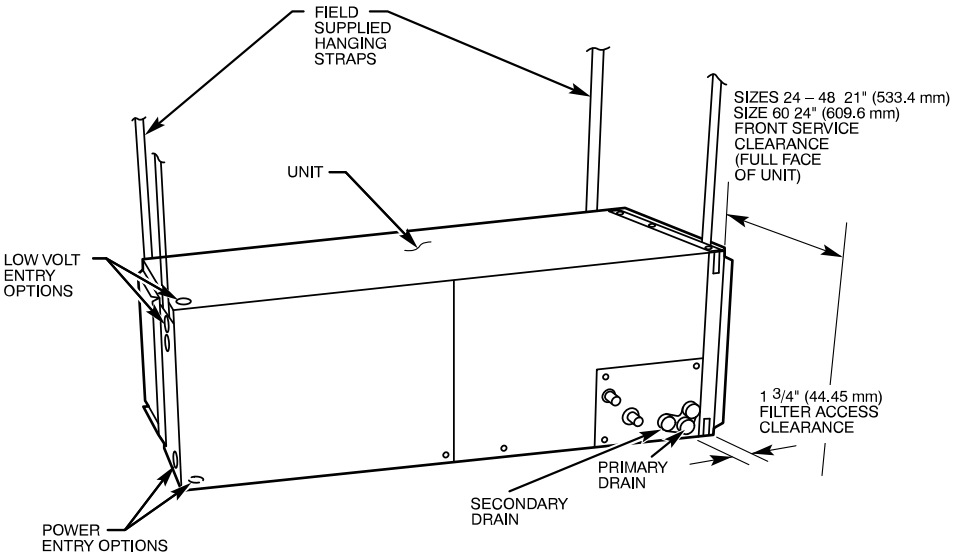

A07140B

Fig. 2 – Slope Coil in Horizontal Left ApplicationFCM

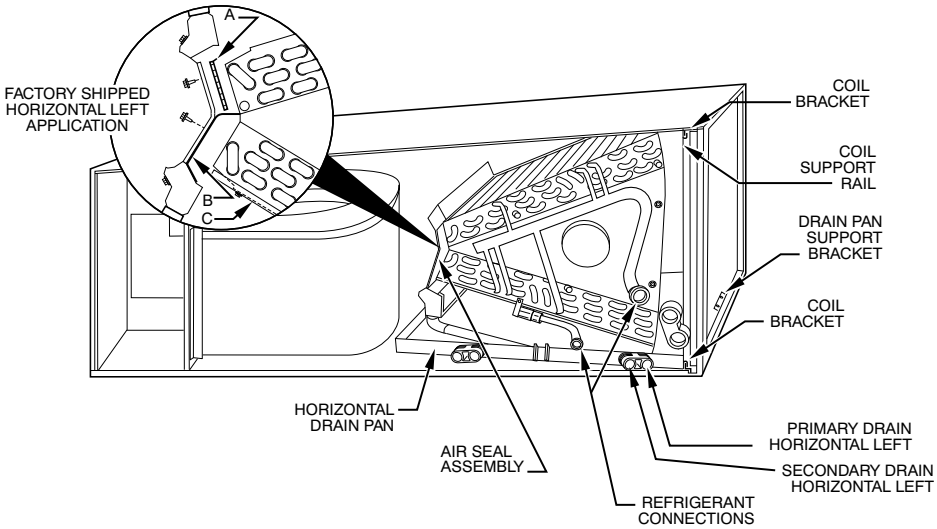

A00072A

Fig. 3 – A-Coil in Horizontal Left ApplicationFCM

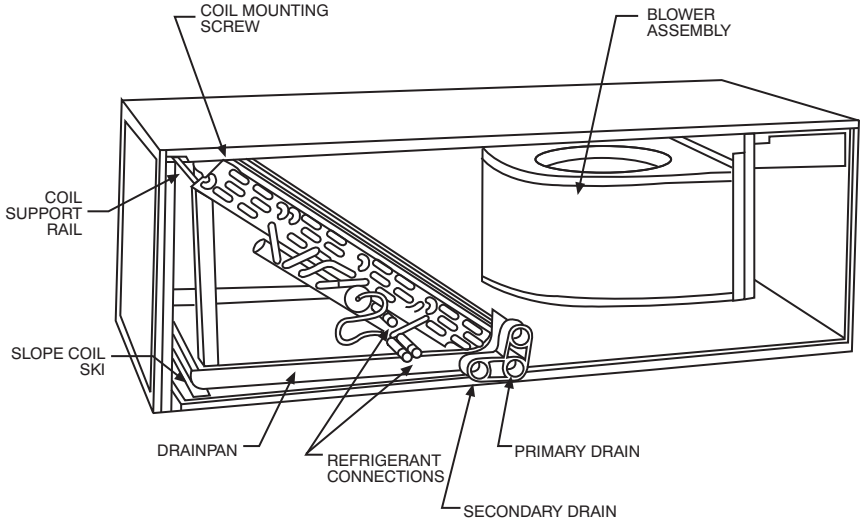

A03001

Fig. 4 – Conversion for Horizontal Right Applications - Slope Coil Only

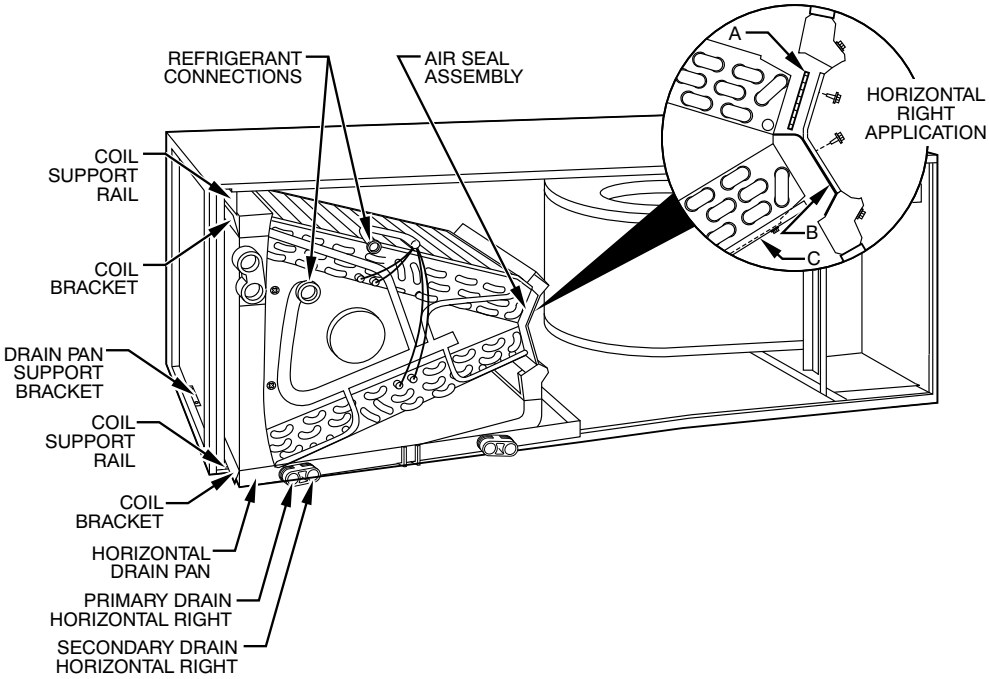

A00071

Fig. 5 – Conversion for Horizontal Right Applications - A-Coil Only

Modular Units

The FCM Fan Coil in sizes 36, 48, and 60 are available as 2-piece modular units. Modular construction allows installer to disassemble unit into 2 components, coil box and blower box, for ease of installation.

To disassemble unit, remove rear corner brackets by removing 2 screws which secure brackets. Remove either 2 screws in each front corner of coil box, or 2 screws in blower box (Fig. 6). Do not remove all 4 screws in each corner. Sections may now be separated by lifting top section from lower section.

To reassemble, reverse above procedure. Be certain to reinstall all fasteners when reassembling.

Upflow Installation

If return air is to be ducted through a floor, set unit on floor over opening and use 1/8 to 1/4-in (3 to 6 mm) thick fireproof resilient gasket between duct, unit, and floor.

Side return is a field option on slope coil models. Cut opening per dimensions (Fig. 1). A field-supplied bottom closure is required.

All return-air must pass through the coil.

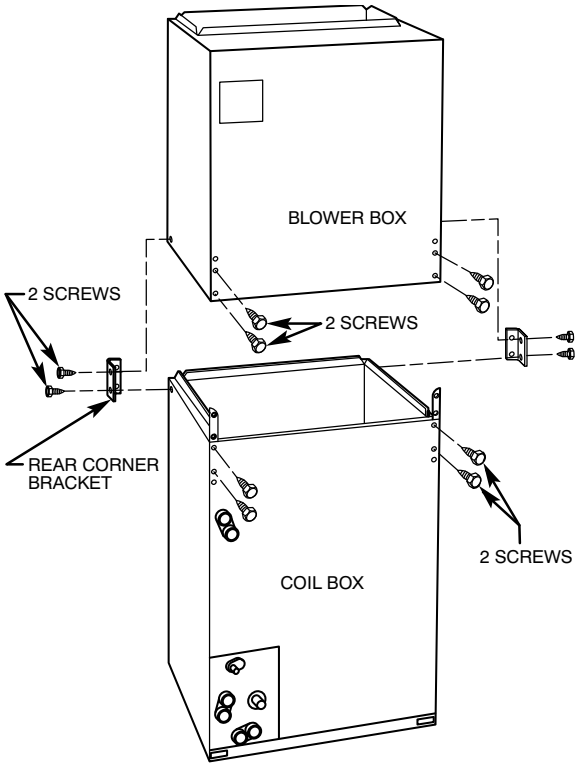

A95293

Fig. 6 – Removal of Brackets on Modular Unit

Downflow Installation

In this application, field conversion of the evaporator is required using accessory downflow kit along with an accessory base kit.

⚠ CAUTION

PRODUCT OR PROPERTY DAMAGE HAZARD

Failure to follow this warning caution may result in product or property damage.

The conversion of the fan coil to downflow requires special procedures for the condensate drains on both A-coil and Slope-coil units. The vertical drains have an overflow hole between the primary and secondary drain holes. This hole is plugged for all applications except downflow, and must be used for downflow. During conversion process, remove plastic cap covering vertical drains only and discard. Remove plug from overflow hole and discard. At completion of downflow installation, caulk around vertical pan fitting to door joint to retain low air leak performance of the unit.

NOTE: To convert units for downflow applications, refer to Installation Instructions supplied with kit for proper installation. See the Product Data or contact your supplier for the kit number. Use fireproof resilient gasket, 1/8- to 1/4-in. (3.2 to 6.4mm) thick, between duct, unit, and floor.

Horizontal Installation

Units must not be installed with access panels facing up or down.

For applications having high return static and humid return air, the Water Management Kit, KFAHC0125AAA, may need to be used to assist in water management.

Be sure installation complies with all applicable building codes that may require installation of a secondary condensate pan.

1. Arrange support for unit by setting it in or above secondary condensate pan.
2. When suspending unit from ceiling dimples in casing indicate proper location of screws for mounting metal support straps (Fig. 2).

Horizontal Right Conversion of Units with Slope Coils

NOTE: Gasket kit number KFAHD0101SLP is required for horizontal slope coil conversion to maintain low air leak/low sweat performance.

1. Remove blower and coil access panels and fitting panel (Fig. 4).
2. Remove coil mounting screw securing coil assembly to right side casing flange.
3. Remove coil assembly.
4. Lay fan coil on its right side and reinstall coil assembly with condensate pan down (Fig. 4).
5. Attach coil to casing flange using previously removed coil mounting screw.
6. Make sure pan cap in fitting door is properly seated on fitting door to retain low air leak rating of the unit.
7. Add gaskets from kit - KFAHD.
8. Align holes with tubing connections and condensate pan connections. Reinstall access panels and fitting panel.
9. Make sure liquid and suction tube grommets are in place to prevent air leaks and cabinet sweating. Install grommets after brazing.

Horizontal Right Conversion of Units with A-Coils

1. Remove blower and coil access panels (Fig. 5).
2. Remove metal clip securing fitting panel to condensate pan. Remove fitting panel.
3. Remove 2 snap-in clips securing A-coil in unit.
4. Slide coil and pan assembly out of unit.
5. Remove horizontal drain pan support bracket from coil support rail on left side of unit and reinstall on coil support rail on right side of unit.
6. Convert air seal assembly for horizontal right.
   a. Remove air seal assembly from coil by removing 4 screws (Fig. 5).
   b. Remove air splitter (B) from coil seal assembly by removing 3 screws (Fig. 6 inset).
   c. Remove filler plate (A) and install air splitter (B) in place of filler plate.
   d. Install filler plate (A) as shown in horizontal right application.
   e. Remove condensate troughs (C) and install on opposite tube sheets.
   f. Install hose onto plastic spout.
7. Install horizontal pan on right side of coil assembly.
8. Slide coil assembly into casing. Be sure coil bracket on each corner of vertical pan engages coil support rails.
9. Reinstall 2 snap-in clips to correctly position and secure coil assembly in unit. Be sure clip with large offsets is used on right side of unit to secure horizontal pan.
10. Remove two oval fitting caps from left side of the coil, access panel, and fitting panel.
11. Remove insulation knockouts on right side of coil access panel.
12. Remove 2 oval coil access panel plugs and reinstall into holes on left side of coil access panel and fitting panel.
13. Install condensate pan fitting caps (from Step 10) in right side of coil door making sure that cap snaps and seats cleanly on back side of the coil door. Make sure no insulation interferes with seating of cap.
14. Reinstall access and fitting panels, aligning holes with tubing connections and condensate pan connections. Be sure to reinstall metal clip between fitting panel and vertical condensate pan.
15. Make sure liquid and suction tube grommets are in place to prevent air leaks and cabinet sweating.

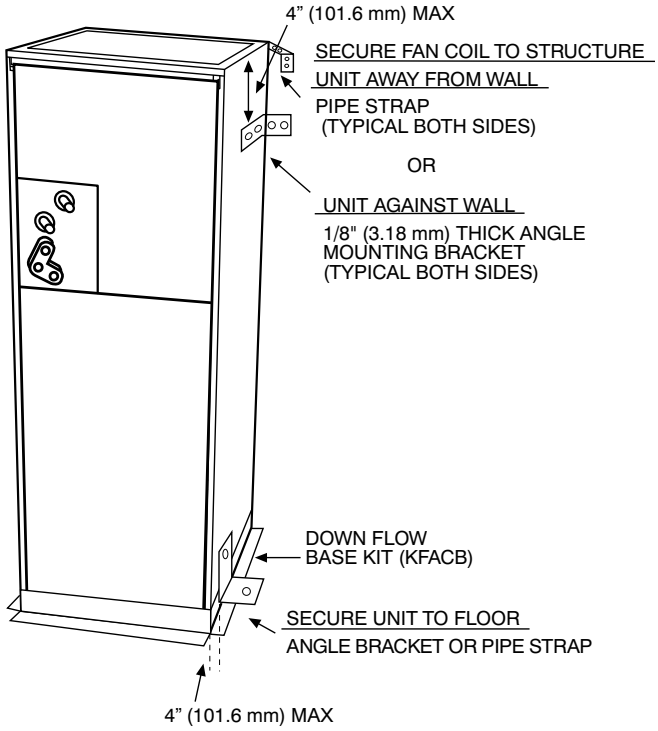

Fig. 7 – Mobile Home or Manufactured Housing Applications

Manufactured and Mobile Home Housing Applications

1. Fan coil unit must be secured to the structure using field-supplied hardware.
2. Allow a minimum of 24-in (610 mm) clearance from access panels.
3. Recommended method of securing for typical applications:
   a. If fan coil is away from wall, attach pipe strap to top of fan coil using no. 10 self-tapping screws. Angle strap down and away from back of fan coil, remove all slack, and fasten to wall stud of structure using 5/16-in. lag screws. Typical both sides of fan coil.

b. If fan coil is against wall, secure fan coil to wall stud using 1/8-in (3 mm) thick right-angle brackets. Attach brackets to fan coil using no. 10 self-tapping screws and to wall stud using 5/16-in. lag screws (Fig. 7).

Air Ducts

Connect supply-air duct over outside of 3/4-in. flange provided on supply-air opening. Secure duct to flange with proper fasteners for type of duct used, and seal duct-to-unit joint.

Duct connection flanges are provided on unit air discharge connection.

Use flexible connectors between ductwork and unit to prevent transmission of vibration. When electric heater is installed, use heat resistant material for flexible connector between ductwork and unit at discharge connection. Ductwork passing through unconditioned space must be insulated and covered with vapor barrier.

Duct Work Acoustical Treatment

Metal duct systems that do not have a 90 degree elbow and 10 feet of main duct before first branch takeoff may require internal acoustical insulation lining. As an alternative, fibrous duct work may be used if constructed and installed in accordance with the latest edition of SMACNA construction standard on fibrous glass ducts. Both acoustical lining and fibrous duct work shall comply with National Fire Protection Association as tested by UL Standard 181 for Class 1 air ducts.

Electrical Connections

⚠ WARNING

ELECTRICAL OPERATION HAZARD

Failure to follow this warning could result in personal injury or death.

Before installing or servicing unit, always turn off all power to unit. There may be more than 1 disconnect switch. Turn off accessory heater power if applicable.

⚠ WARNING

ELECTRICAL SHOCK OR UNIT DAMAGE HAZARD

Failure to follow this warning could result in personal injury, death, and/or unit damage.

If a disconnect switch is to be mounted on unit, select a location where drill and fasteners will not contact electrical or refrigeration components.

⚠ WARNING

ELECTRICAL SHOCK HAZARD

Failure to follow this warning could result in personal injury or death.

Field wires on the line side of the disconnect found in the fan coil unit remain live, even when the pull-out is removed. Service and maintenance to incoming wiring cannot be performed until the main disconnect switch (remote to the unit) is turned off.

Line Voltage Connections

If unit contains an electric heater, remove and discard power plug from fan coil and connect male plug from heater to female plug from unit wiring harness. (See Electric Heater Installation Instructions.)

For units without electric heat:

1. Connect 208/230V power leads from field disconnect to yellow and black stripped leads
2. Connect ground wire to unit ground lug.

Check all factory wiring per unit wiring diagram and inspect factory wiring connections to be sure none were loosened in transit or installation.

NOTE: Before proceeding with electrical connections, make certain that supply voltage, frequency, and phase are as specified on unit rating plate. Be sure that electrical service provided by the utility is sufficient to handle the additional load imposed by this equipment. See unit wiring label for proper field high- and low- voltage wiring. Make all electrical connections in accordance with NEC and any local codes or ordinances that may apply. Use copper wire only. The unit must have a separate branch electric circuit with a field-supplied disconnect switch located within sight from and readily accessible from the unit.

A factory-authorized disconnect kit is available for installation of 0- through 10-kW applications. When electric heat packages with circuit breakers are installed, the circuit breaker can be used as a disconnect.

Transformer is factory wired for 230V operation. For 208V applications, disconnect black wire from 230V terminal on transformer and connect it to 208V terminal (Fig. 8).

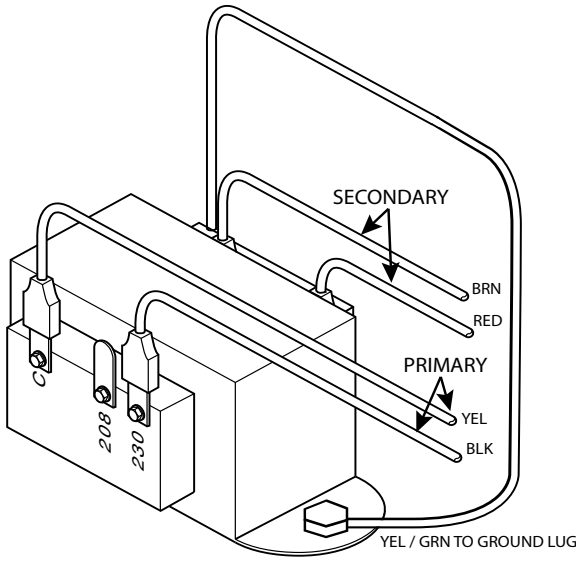

Fig. 8 – Transformer Connections

24V Control System Connections to Unit Printed-Circuit Board

Use No. 18 AWG color-coded, insulated (35°C minimum) wires to make low-voltage connections between User Interface and unit. If User Interface is located more than 100 ft. from unit (as measured along the low-voltage wires), use No. 16 AWG color-coded, insulated (35°C minimum) wires or in accordance with local codes.

Connect low-voltage leads to User Interface and outdoor unit (Fig. 9 or Fig. 10).

NOTE: Where local codes require User Interface wiring be routed through conduit or raceways, splices can be made inside fan coil unit. All wiring must be NEC Class 1 and must be separated from incoming power leads.

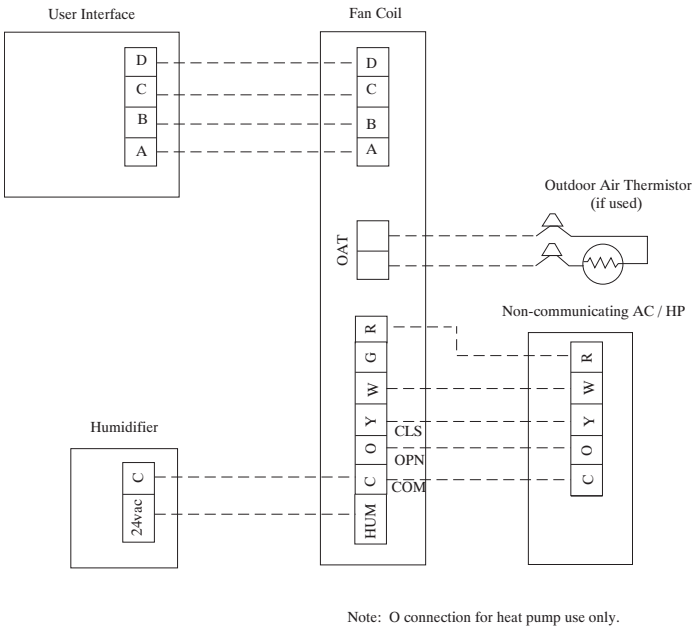

Fig. 9 – Fan Coil Wiring with Non-Communicating Single-Stage AC/HP

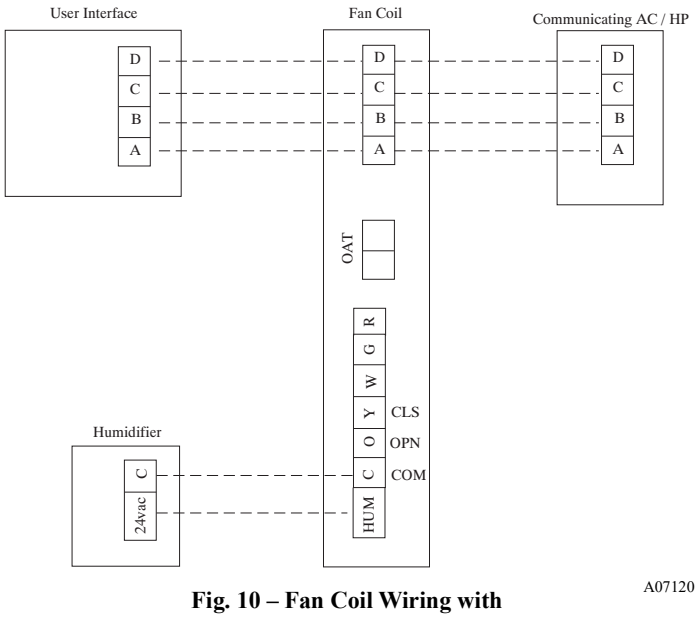

Fig. 10 – Fan Coil Wiring with Communicating AC/HP

Manufactured Housing

In manufactured housing applications, the Code of Federal Regulations, Title 24, Chapter XX, Part 3280.714 requires that supplemental electric heat be locked out at outdoor temperatures above 40°F (4°C), except for a heat pump defrost cycle.

Ground Connections

⚠ WARNING

ELECTRICAL SHOCK HAZARD

Failure to establish uninterrupted or unbroken ground could result in personal injury and/or death.

According to NEC, NFPA 70, and local codes, the cabinet must have an uninterrupted or unbroken ground to minimize personal injury if an electrical fault should occur. The ground may consist of electrical wire or metal conduit when installed in accordance with existing electrical codes. If conduit connection uses reducing washers, a separate ground wire must be used.

NOTE: Use UL listed conduit and conduit connector to connect supply wire(s) to unit and obtain proper grounding. If conduit connection uses reducing washers, a separate ground wire must be used. Grounding may also be accomplished by using grounding lug provided in control box. Use of dual or multiple supply circuits will require grounding of each circuit to ground lugs provided on unit and heaters.

Refrigerant Tubing Connection and Evacuation

Insulate entire suction tube. Do not use damaged, dirty, or contaminated tubing because it may plug refrigerant flow-control device. ALWAYS evacuate the coil and field-supplied tubing to 500 microns before opening outdoor unit service valves.

⚠ CAUTION

PRODUCT DAMAGE HAZARD

Failure to follow this caution may result in product or property damage.

A brazing shield MUST be used when tubing sets are being brazed to the unit connections to prevent damage to the unit surface and condensate pan fitting caps.

Units have sweat suction and liquid tube connections. Make suction tube connection first.

1. Cut tubing to correct length.
2. Insert tube into sweat connection on unit until it bottoms.

⚠ CAUTION

PRODUCT DAMAGE HAZARD

Failure to follow this caution may result in product or property damage.

Wrap a wet cloth around rear of fitting to prevent damage to TXV and factory-made joints.

3. Braze connection using silver bearing or non-silver bearing brazing materials. Do not use soft solder (materials which melt below 800°F / 427°C). Consult local code requirements.
4. Evacuate coil and tubing system to 500 microns using deep vacuum method.

Condensate Drains

CAUTION

UNIT OR PROPERTY DAMAGE HAZARD

Failure to follow this warning caution may result in product or property damage.

The conversion of the fan coil to downflow requires special procedures for the condensate drains on both A-coil and Slope-coil units. The vertical drains have an overflow hole between the primary and secondary drain holes. This hole is plugged for all applications except downflow, and must be used for downflow. During conversion process, remove plastic cap covering vertical drains only and discard. Remove plug from overflow hole and discard. At completion of downflow installation, caulk around vertical pan fitting to door joint to retain low air leak performance of the unit.

To connect drains, the cap openings must be removed. Use a knife to start opening near tab and using pliers, pull tab to remove disk. Clean edge of opening if necessary and install the condensate line. Finally, caulk around lines where they exit fitting to retain low leak rating of the unit. Units are equipped with primary and secondary 3/4-in. FPT drain connections. For proper condensate line installation see Fig. 1 thru Fig. 5. To prevent property damage and achieve optimum drainage performance, BOTH primary and secondary drain lines should be installed and include properly sized condensate traps (Fig. 11, Fig. 13). Factory-approved condensate traps are available. Be sure to install plastic push-in plugs in unused condensate drain fittings. It is recommended that PVC fittings be used on plastic condensate pan. Do not over-tighten. Finger-tighten plus 1-1/2 turns. Use pipe dope.

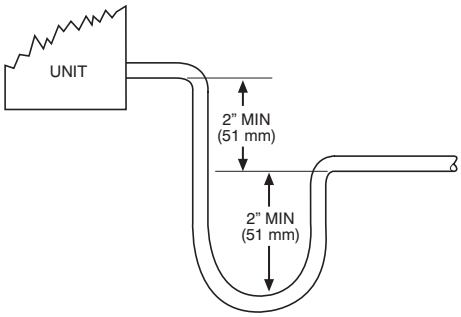

Fig. 11 – Recommended Condensate Trap

A03002

Fig. 12 – Insufficient Condensate Trap

A03013

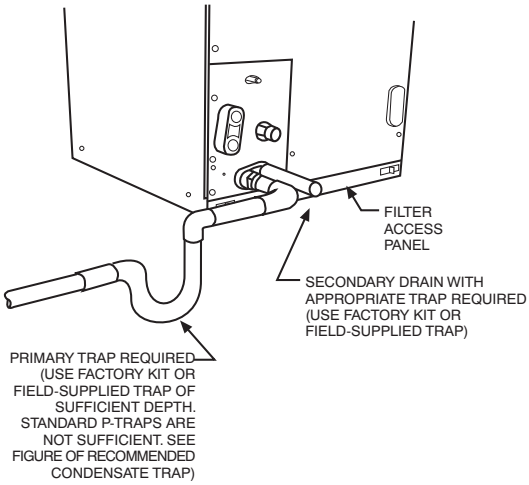

Fig. 13 – Fig. 13 - Condensate Drain

A03003

CAUTION

PRODUCT DAMAGE HAZARD

Failure to follow this caution may result in product or property damage.

Use only full size P-traps in the condensate line (Fig. 11). Shallow running traps are inadequate and DO NOT allow proper condensate drainage (Fig. 12).

NOTE: When connecting condensate drain lines, avoid blocking filter access panel, thus preventing filter removal. After connection, prime both primary and secondary condensate traps.

NOTE: If unit is located in or above a living space where damage may result from condensate overflow, a field-supplied, external condensate pan should be installed underneath the entire unit, and a secondary condensate line (with appropriate trap) should be run from the unit into the pan. Any condensate in this external condensate pan should be drained to a noticeable place. As an alternative to using an external condensate pan, some localities may allow the use of a separate 3/4-in (19 mm) condensate line (with appropriate trap) to a place where the condensate will be noticeable. The owner of the structure must be informed that when condensate flows from the secondary drain or external condensate pan, the unit requires servicing or water damage will occur.

Install traps in the condensate lines as close to the coil as possible (Fig. 13). Make sure that the outlet of each trap is below its connection to the condensate pan to prevent condensate from overflowing the drain pan. Prime all traps, test for leaks, and insulate traps if located above a living area. Condensate drain lines should be pitched downward at a minimum slope of 1-in (25 mm) for every 10-ft (3 m) of length. Consult local codes for additional restrictions or precautions.

CAUTION

PROPERTY DAMAGE HAZARD

Failure to follow this caution may result in product or property damage.

Never operate unit without a filter or with filter access door removed.

IMPORTANT: Factory authorized filters must be used when locating the filter inside the unit (Table 1). For those applications where access to an internal filter is impractical, a field-supplied filter must be installed in return duct system.

Table 1 – Filter Kits

	PART NUMBER	SIZE USED WITH
FILTER KIT (12 PACK)	KFBFK0112MED	24
	KFBFK0112LRG	36, 48
	KFBFK0112XXL	60

Unit Start-Up

Refer to outdoor unit Installation Instructions for system start-up instructions and refrigerant charging method details.

Low-Voltage Circuit Fusing and Reference

The low-voltage circuit is fused by a board-mounted 3-Amp. automotive fuse placed in series with transformer SEC1 and R circuit. The C circuit of transformer circuit is referenced to chassis ground through a printed circuit run at SEC2 and metal PC board mounting eyelets. Check to be sure PC Board is mounted securely using both factory installed screws.

NOTE: Mis-wiring or shorting any of the low voltage connections may cause the low voltage fuse to open but will not damage the User Interface or fan coil control. Simply rewire and replace fuse to correct fault.

Accessory Installation

Accessory Electric Heaters

Electric heaters may be installed with FCM fan coil per instructions supplied with electric heater package. See unit rating plate for factory-approved electric heater kits.

Hydronic Heat Applications

The FE fan coil supports 2 types of Hydronic Heat applications:

1. Hot water coil in combination with a heat pump, or hot water coil as sole heat source.
2. FE fan coil combined with radiant hot water heat.

In either application, a Relay Interface Kit (refer to Product Data) must be installed in place of an electric heater. The system will identify that Hydonic Heat has been installed during the initial commissioning process. The system will treat the hot water coil as either auxiliary heat in a heat pump application, or as the sole heat source. Setup options for Hydronic Heat applications are described in the User Interface Installation Instructions. Options include: Hot Water Only Operation, Heat Pump Only Operation, Hot Water Operation during Defrost, Airflow Level Selection, and Blower ON/OFF Delays.

Outdoor Air Thermistor (OAT)

A 2-screw terminal strip is provided for connection of an outdoor temperature thermistor. This strip is marked OAT. The installation of an outdoor temperature sensor using the fan coil OAT terminals is optional. If the outdoor unit is not equipped for communications, fan coil OAT input can be used to supply outdoor temperature data for system level functions and for temperature display on User Interface. Outdoor units with a communicating control are shipped with a factory installed OAT. This factory installed OAT is used for all outdoor unit specific and system level functions requiring outdoor temperature if an OAT is not added to fan coil. If an OAT is added in the fan coil, the fan coil connected OAT will be used for system level functions and the factory supplied outdoor unit OAT will be used for outdoor unit control functions.

Using two wires of field-supplied thermostat wire cable, wire one lead of thermistor to one screw terminal and the other lead to remaining screw terminal; there is no polarity to be observed. It is strongly recommended that two wires be used to connect the thermistor to eliminate noise interference in temperature reading. If there are not two spare wires available in cable, one wire may be used to connect thermistor to OAT screw terminal 1 and the other lead of the thermistor can be wired to 24VAC COM (C) wire. OAT screw terminal 1 is terminal located closest to the ABCD system communications and is marked with a small number 1 next to the terminal strip.

NOTE: Mis-wiring OAT inputs will not cause damage to either fan coil control or thermistor. If the thermistor is wired incorrectly, no reading will appear at User Interface. Re-wire thermistor correctly for normal operation.

Electronic Air Cleaner Connections

When using an electronic air cleaner with FCM fan coil, use airflow sensor part no. KEAAC0101AAA. The airflow sensor turns on electronic air cleaner when fan coil blower is operating.

Humidifier Connections

The fan coil control terminal marked “HUM” is provided for low voltage (24VAC) control of a humidifier. No humidistat is required as User Interface monitors indoor humidity. When commanded to operate humidifier, the fan coil control will energize the “HUM” output to turn humidifier on and de-energize HUM output to turn humidifier off. Wire “HUM” and “C” terminals directly to humidifier as shown in Table 9 or Table 10.

System Shutdown Accessories

The FCM fan coil G thermostat terminal input can be configured through the User Interface to recognize accessories that will shut the system down in response to a malfunction. Types of devices may include a Condensate Overflow Switch that is designed for this purpose. The fan coil can be configured to recognize either Normally Open or Normally Closed (default) contact devices through the User Interface Set-Up screens. Wire the accessory device contacts in series with the R and G thermostat connections at the fan coil control board. The User Interface will respond to the accessory device signal by ordering a shutdown of the indoor and outdoor equipment and will display SYSTEM MALFUNCTION on its screen. Refer to the User Interface Installation Instructions for more detail (Table 14).

Generator

The FCM fan coil G thermostat terminal input can be configured through the User Interface to recognize a Generator Normally Open dry-contact output to signal the system that a generator malfunction condition exists. Wire the generator output in series with the R and G thermostat connections at the fan coil control board. The User Interface will display GENERATOR MALFUNCTION when the G thermostat input is energized. This function requires the addition of a Generator Self Test Verifier (Part No. GSV200) which must be purchased separately. Visit www.GeneratorVerifier.com for details and ordering information. Refer to the User Interface Installation Instructions for more detail (Table 14).

Ventilation Accessory

The FCM fan coil G thermostat terminal input can be configured through the User Interface to recognize a Normally Open dry-contact output to signal the system that a Ventilation Accessory requires fan coil blower operation. Blower operation can be configured for Low, Med or High speed when the G terminal is energized. Wire the Accessory output in series with the R and G thermostat connections at the fan coil control board. Refer to the User Interface Installation Instructions for more detail (Table 14).

Manufacturer reserves the right to change, at any time, specifications and designs without notice and without obligations.

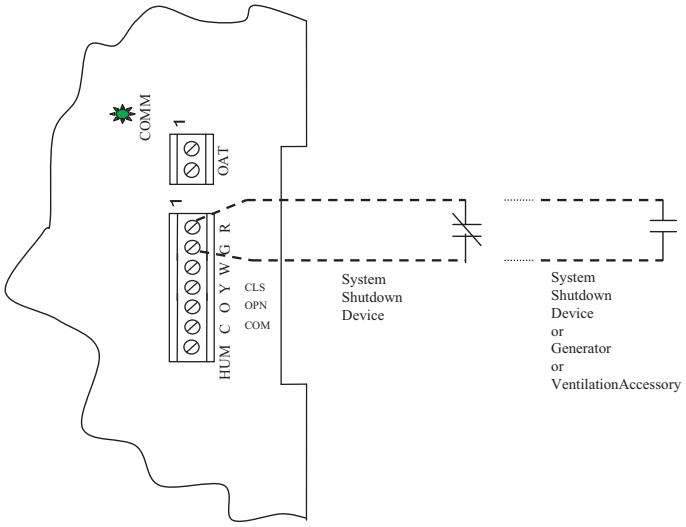

A07121

Fig. 14 – "G" Terminal Accessory Wiring

Start-Up and Troubleshooting

NOTE: Always check high and low voltage supply to the fan coil components. Check the integrity of the plug receptacle connections and fan coil wiring harness prior to assuming a component failure.

LED Description:

LEDs built into fan coil control provide installer or service person information concerning operation and/or fault condition of the fan coil control and ECM motor. This information is also available at system user interface in text with basic troubleshooting instructions. Careful use of information displayed will reduce the need for extensive manual troubleshooting.

The amber LED located at bottom center of control adjacent to motor harness plug is motor status LED and it is labeled MOTOR. A second amber LED located in upper right center of control adjacent to System Communications connector (A,B,C,D) is the System Status LED and it is labeled STATUS. The green LED labeled COMM is also located adjacent to System Communications connector, below STATUS LED, and is used as an indicator of system communications status. Status Codes will be displayed on the STATUS LED using the following protocol:

1. The number of short flashes indicates first digit of code.
2. The number of long flashes indicates second digit of code.
3. A short flash is 0.25 seconds on. A long flash is 1 second on.
4. The time between flashes is 0.25 seconds.
5. The time between last short flash and first long flash is 1 second.
6. The LED will be off for 2.5 seconds before repeating code.

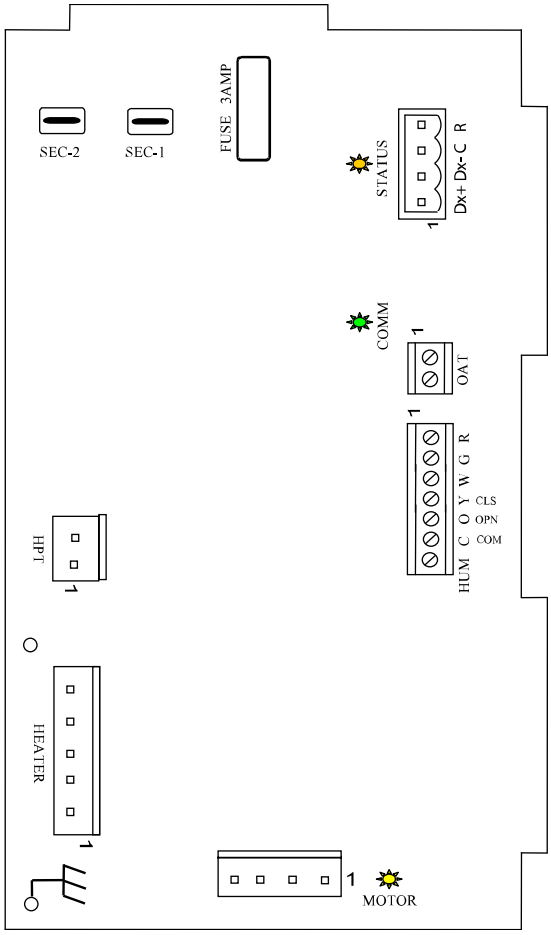

A07122ICP

Fig. 15 – Detail of Printed-Circuit Board (PCB) Connections

Fan Coil Control Start-Up and System Communications Troubleshooting:

On power up, green COMM LED will be turned off until successful system communications are established (this should happen within 10 seconds). Once communications with user interface are successful, COMM LED will be lit and held on. At the same time, amber STATUS LED will be lit and held continuously on until a request for operating mode is received. The STATUS LED will be on any time fan coil is in idle mode. If, at any time, communications are not successful for a period exceeding 2 minutes, fan coil control will only allow emergency heating or cooling operation using a common thermostat, a non-communicating outdoor unit and the R, C, Y, O, W outdoor unit terminal strip connections and will display **Status Code 16, System Communication Fault**, on amber STATUS LED. No further fan coil troubleshooting information will be available at user interface until communications are re-established.

If COMM LED does not light within proper time period and Status Code is not displayed:

1. Check system transformer high and low voltage to be sure the system is powered.
2. Check fuse on fan coil control to be sure it is not blown. If fuse is open, check system wiring before replacing it to be sure a short does not cause a failure of replacement fuse.

If COMM LED does not light within proper time period and Status Code is displayed:

Check system wiring to be sure user interface is powered and connections are made A to A, B to B, etc. and wiring is not shorted.

Mis-wiring or shorting of the ABCD communications wiring will not allow successful communications.

NOTE: Shorting or mis-wiring low voltage system wiring **will not** cause damage to fan coil control or user interface but may cause low voltage fuse to open.

ECM Motor Troubleshooting

The ECM motor used in this product consists of two parts: the Control Module and the motor winding section. Do not assume motor or module is defective if it will not start. Use the designed-in LED information aids and follow troubleshooting steps described below before replacing motor Control Module or entire motor. Motor Control Module is available as a replacement part.

Verify Motor Winding Section:

⚠ WARNING

ELECTRICAL SHOCK HAZARD

Failure to follow this warning could result in personal injury or possible equipment damage.

After disconnecting power from the ECM motor, wait at least 5 minutes before removing the control section. Internal capacitors require time to discharge.

Before proceeding to replace a motor Control Module:

1. Check motor winding section to be sure it is functional.
2. Remove motor Control Module section and unplug winding plug. Motor shaft should turn freely, resistance between any two motor leads should be similar and resistance between any motor lead and unpainted motor end should exceed 100,000 ohms.
3. Failing any of these tests, entire ECM motor must be replaced.
4. Passing all of the tests, motor Control Module alone can be replaced.

MOTOR TURNS SLOWLY:

1. Low static pressure loading of blower while access panel is removed will cause blower to run slowly. Particularly at low airflow requests. This is normal, do not assume a fault exists.
2. Recheck airflow and system static pressure using user interface service screens with access panel in place.

NOTE: Blower motor faults will not cause a lockout of blower operation. Fan coil control will attempt to run the blower motor as long as user interface maintains a demand for airflow. Fan coil control will not operate electric heaters while a fault condition exists. The fan coil control communicates with the motor at least once every 5 seconds, even when the motor is idle. If, during operation, the fan coil control does not communicate with the motor for more than 25 seconds, the motor will shut itself down and wait for communications to be reestablished.

Using Motor LED in Troubleshooting

The MOTOR LED is connected to the blower motor communication line and works with the fan coil control microprocessor and the STATUS LED to provide fan coil operation and troubleshooting information. When the motor is commanded to operate, the MOTOR LED will be turned on and will flash each time instructions are sent to the motor. When the motor is commanded to stop, the MOTOR LED will be turned off.

If the MOTOR LED is lit, flashing and the motor is running or if the MOTOR LED is off and the motor is stopped, operation is normal and no motor fault exists.

If the MOTOR LED is lit, flashing and the motor does not run, or if the MOTOR LED is off and the motor is running, check the STATUS LED for the Status Code. Refer to the troubleshooting instructions for the indicated Status Code in Section E, Fan Coil Troubleshooting.

Fan Coil Troubleshooting

Fan coil faults indicated by flashing codes on the amber system STATUS LED can be resolved using troubleshooting information provided below. Codes are listed in order of their priority, highest to lowest. Though multiple faults can exist at any time, only the highest priority code will be displayed on STATUS LED. Clearing the indicated fault when multiple faults exist will cause the next highest priority Status Code to be flashed. All existing faults, as well as a fault history, can be viewed at user interface.

Status Code 45, Control Board Test Fault:

Fan coil control has failed internal start-up tests and must be replaced. No other service procedure will correct.

Status Code 37, Heater Output Sensed "ON" When Not Energized:

Fan coil control is provided with circuitry to detect presence of a 24VAC signal on Electric Heater stage 1 and stage 2 outputs. If fan coil control detects a 24VAC signal on either heater stage output and it is not supplying signal, Status Code 37 will be displayed on STATUS LED. Fan coil control will turn off output and command blower motor to supply an airflow determined to be safe for current operation mode with electric heaters energized.

To find the fault:

1. Stop all system operations at User Interface and check heater stage 24VAC outputs.
2. Disconnect electric heater at plug/receptacle 2 and check heater wiring for faults. See Status Code 36 for more information.

Status Code 44, Motor Communication Fault:

The MOTOR LED is connected to the blower motor communication line and works with the fan coil control microprocessor and STATUS LED to provide fan coil operation and troubleshooting information. When motor is commanded to operate, the MOTOR LED will be turned on and will flash each time instructions are sent to the motor.

When the motor is commanded to stop, the MOTOR LED will be turned off. The MOTOR LED will not flash to indicate communications when it is turned off.

Fan coil control is constantly communicating with the motor, even when the motor and MOTOR LED are off. If motor does not acknowledge receipt of communications, the control will display Status Code 44 on STATUS LED and continue to try to communicate with the motor. If motor acknowledges communication, Status Code will be cleared.

If MOTOR LED is lit and flashing and motor does not run:

1. Check the STATUS LED. If STATUS LED is indicating a Status 44 code, check the motor wiring harness for proper connection to control and motor receptacles.
2. Check motor wiring harness to be sure all wiring complies with wiring diagram description, makes a complete circuit from connector to connector and is not shorted.
3. Check 12VDC low voltage supply to motor at pins 1 (+) and 2 (-) of motor header connection to fan coil control.

If all checks are normal, fan coil control is good and Control Module on motor may need replacement. Check motor and Motor Control Module following the instructions in Section C. ECM Motor Troubleshooting.

Shorted or mis-wiring of the low voltage motor harness wiring will not cause damage to fan coil control or to motor Control Module.

If the MOTOR LED is off, STATUS LED is indicating a Status Code 44 and motor is running:

Disconnect the motor harness at the fan coil control. If motor continues to run, fan coil control is good and Control Module on motor may need replacement.

Status Code 25, Invalid Motor / Model Selection:

On initial start-up, fan coil control shall poll motor for its size data and check fan coil size data stored in fan coil control memory.

1. If motor size is incorrect for fan coil size or fan coil size data is invalid, Status Code 25 will be displayed on STATUS LED.
2. If model size data is missing (as is the case when a replacement fan coil control is installed), system User Interface will prompt installer to enter correct model size from a list of valid sizes.
3. If motor size is incorrect for model size, motor must be replaced with proper size motor. **Fan coil control will not respond to operation requests until this fault condition is resolved.**

Status Code 27, Invalid Outdoor Unit Size:

On initial power-up, fan coil control will write into memory outdoor unit size as provided by User Interface in a fully communicating system.

1. If outdoor unit size is invalid, Status Code 27 will be displayed on STATUS LED.
2. User Interface will prompt the installer to choose size from a list of valid sizes for application with fan coil.
3. Check communications wiring to be sure User Interface has established communications with outdoor unit or select proper size from valid size list provided at User Interface.
4. Check motor and motor Control Module following the instructions in Section C. ECM Motor Troubleshooting.

Status Code 26, Invalid Heater Size:

On initial power-up, fan coil control will write into memory electric heater size as read from heater if heater is provided with Identifier Resistor (IDR). Heater size must be valid for combination of indoor and outdoor components installed. Fan coil control will read IDR value connected to pins 5 and 8 of heater harness connector. If no resistor is found, system User Interface will prompt installer to verify that no heater is installed. Verifying that this is correct will establish that fan coil is operating without an electric heater accessory. Upon choosing negative option, installer will be prompted to select heater size installed from a list of valid heater sizes for fan coil and outdoor unit size installed. If heater ID resistor value read is invalid, Status Code 26 will be displayed on STATUS LED. If heater installed is equipped with a resistor connected to pins 5 and 8 of heater harness connector and Status Code 26 is displayed on STATUS LED:

1. Check wiring harness connections to be sure connections are secure.
2. If symptoms persist, disconnect wiring harness at fan coil control heater header and check for a resistance value greater than 5000 ohms.
3. Check for proper wiring of resistor assembly.
4. Make sure heater size installed is an approved size for outdoor unit and fan coil sizes installed.

NOTE: Fan coil control will not operate electric heater until this Status Code is resolved. If the heater size is set through the User Interface, the heater will be operated as a single stage heater. If staging is desired, the IDR value must be read in by the fan coil control.

Status Code 36, Heater Output Not Sensed When Energized:

Fan coil control is provided with circuitry to detect presence of a 24VAC signal on Electric Heater stage 1 and stage 2 outputs. If fan coil control energizes either heater stage and does not detect the 24VAC signal on output, Status Code 36 will be displayed on the STATUS LED Fan coil control will continue to energize heater output(s) and adjust blower operation to a safe airflow level for energized electric heat stage(s).

To find the fault:

Check for 24VAC on heater stage outputs. Fan coil control or sensing circuit may be bad.

NOTE: It may be useful as an electric heater troubleshooting procedure to disconnect the system communications to force Status Code 16 enabling of emergency heat mode. It is difficult to know which heater output is energized or not energized in normal operation. When fan coil is operated in emergency heat mode using electric heaters, both outputs are energized and de-energized together. Terminal strip inputs to control can then be connected R to W to turn on both electric heat outputs. Heater output sensing circuits can then be checked to resolve Status Code 36 or 37 problems.

Status Code 41, Blower Motor Fault:

If MOTOR LED is lit and flashing and motor does not run:

1. Check STATUS LED. If STATUS LED is indicating Status Code 41, motor control has detected that the motor will not come up to speed within 30 seconds of being commanded to run or that the motor has been slowed to below 250 rpm for more than 10 seconds after coming up to speed. Motor wiring harness and fan coil control are operating properly, do not replace.
2. Check to be sure that the blower wheel is not rubbing the housing.
3. Check motor to be sure that the motor shaft is not seized (motor Control Module must be removed and electronics disconnected from windings to perform this check properly).
4. Check motor windings section following instructions in Section C. ECM Motor Troubleshooting.

If all these checks are normal, the motor Control Module may need replacement.

Status Code 16, System Communication Fault:

On initial power-up and at any time system communications are not successful for a period exceeding 2 minutes following successful communications, the fan coil control will only allow emergency heating or cooling operation using a common thermostat, a non-communicating outdoor unit, and the RGWYO outdoor unit terminal strip connections and will display Status code 16 on the amber STATUS LED (see section E, Emergency Heating and Cooling Modes). No further fan coil troubleshooting information will be available at the User Interface until communications are reestablished.

Check system wiring to be sure the User Interface is powered and connections are made A to A, B to B, etc. and wiring is not shorted. Mis-wiring or shorting of the ABCD communications wiring will not allow successful communications. Correcting wiring faults will clear the code and reestablish communications.

Shorting or mis-wiring the low voltage system wiring will not cause damage to fan coil control or to User Interface but may cause the low voltage fuse to open.

Status Code 46, Brownout Condition:

If the secondary voltage of the transformer falls below 15VAC for a period exceeding 4 seconds, Status Code 46 will be displayed on STATUS LED. If system includes a non-communicating outdoor air conditioner or heat pump, the User Interface will command the fan coil to turn off Y output controlling compressor.

When secondary voltage rises above 17VAC for more than 4 seconds, the brownout condition is cleared and normal system operation will resume subject to any minimum compressor off delay function which may be in effect. Brownout does not affect blower or electric heater operation.

Status Code 53, Outdoor Air Temperature Sensor Fault:

If an OAT sensor is found at power-up, input is constantly checked to be within a valid temperature range. If sensor is found to be open or shorted at any time after initial validation, Status Code 53 will be displayed at amber STATUS LED.

Check for faults in wiring connecting sensor to OAT terminals. Using an Ohmmeter, check resistance of thermistor for a short or open condition. If thermistor is shorted or open, replace it to return the system to normal operation. If fault is in the wiring connections, correcting the fault will clear the code and return the system to normal operation.

NOTE: If fault condition is an open thermistor or a wiring problem that appears to be an open thermistor and the power to the fan coil control is cycled off, the fault code will be cleared on the next power-up but the fault will remain and system operation will not be as expected. This is because on power-up, the fan coil control cannot discern the difference between an open sensor or if a sensor is not installed.

Emergency Heating and Cooling Modes

Fan coil control can provide **emergency** heating or cooling using a common heat/cool thermostat in the event that there are no system communications, fault is in User Interface and no replacement is immediately available.

To activate these modes, the thermostat and outdoor unit must be wired as a common heating/cooling system to fan coil control RGWYOC terminals.

NOTE: These emergency modes do not provide the level of comfort and efficiency expected by the consumer and should only be activated when User Interface cannot be replaced immediately.

Fan Coil Sequence of Operation

The FCM Fan Coil is designed for installation with a communicating User Interface. This fan coil will not respond to commands provided by a common thermostat except under certain emergency situations described in START-UP AND TROUBLESHOOTING section.

The User Interface uses temperature; humidity and other data supplied from indoor and outdoor system components to control heating or cooling system for optimum comfort. The fan coil will be commanded by User Interface to supply airflow and, in the case of a non-communicating outdoor unit, Air Conditioner or Heat Pump control. The fan coil will operate blower at requested airflow for most modes.

The nominal requested airflow will be 350 cfm per ton of nominal cooling capacity as defined by outdoor unit size. Actual airflow request will be adjusted from nominal using indoor and outdoor temperature and indoor humidity data to optimize the system operation for occupant comfort and system efficiency. Refer to User Interface literature for further system control details.

Airflow during electric heater operation must be greater than a minimum level for safe operation. If User Interface instructs fan coil to turn on electric heat and the requested airflow is less than the minimum value required for safe operation of installed heater, the fan coil control will override requested value with the value shown in Table 2.

Care and Maintenance

For continuing high performance, and to minimize possible equipment failure, it is essential that periodic maintenance be performed on this equipment. The only required maintenance that may be performed by the consumer is filter maintenance.

⚠ WARNING

ELECTRICAL SHOCK HAZARD

Failure to follow this warning could result in personal injury or death.

Disconnect all power to unit before servicing field wires or removing control package. The disconnect (when used) on access panel does not disconnect power to the line side of disconnect, but does allow safe service to all other parts of unit. If unit does not have a disconnect, disregard the foregoing. Instead, make sure that a disconnecting means is within sight from, and is readily accessible from, the unit. Disconnect all electrical power to unit before performing any maintenance or service on it.

The minimum maintenance requirements for this equipment are as follows:

1. Inspect and clean or replace air filter each month or as required.
2. Inspect cooling coil, drain pan, and condensate drain each cooling season for cleanliness. Clean as necessary. An inspection port is provided on all A-coil delta plates. Remove plastic plug to inspect.
3. Inspect blower motor and wheel for cleanliness each heating and cooling season. Clean as necessary.
4. Inspect electrical connections for tightness and controls for proper operation each heating and cooling season. Service as necessary.

Consult Fan Coil Service Manual available from equipment distributor for maintenance procedures.

Using the Owner's/User Manual furnished in outdoor unit, the installing technician should explain system operation to the consumer with particular emphasis on indoor fan coil operation sounds and filter maintenance.

⚠ CAUTION

CUT HAZARD

Failure to follow this caution may result in personal injury.

Sheet metal parts may have sharp edges or burrs. Use care and wear appropriate protective clothing, safety glasses and gloves when handling parts, and servicing furnaces.

Table 2 – FCM Fan Coil Airflow Delivery Chart (CFM) - Electric Heating Models

FAN UNIT SIZE	OUTDOOR UNIT CAPACITY BTUH	ELECTRIC HEATER kW RANGE											
		0-5			0-10			0-15			0-20		
		Lo	Nom	High	Lo	Nom	High	Lo	Nom	High	Lo	Nom	High
24	18,000	700	700	805	750	750	863	-	-	-	-	-	-
	24,000	700	700	805	750	750	863	1050	1050	1208	-	-	-
	30,000	875	875	1006	875	875	1006	1050	1050	1208	1200	1200	1380
	36,000	1050	1050	1208	1050	1050	1208	1050	1050	1208	1200	1200	1380
36	24,000	700	700	805	750	750	863	1050	1050	1208	1225	-	-
	30,000	875	875	1006	875	875	1006	1050	1050	1208	1225	-	-
	36,000	1050	1050	1208	1050	1050	1208	1050	1050	1208	1225	1225	1409
	42,000	1225	1225	1409	1225	1225	1409	1225	1225	1409	1225	1225	1409
FAN UNIT SIZE	OUTDOOR UNIT CAPACITY BTUH	ELECTRIC HEATER kW RANGE											
		0-10			0-15			0-20			0-30		
		Lo	Nom	High	Lo	Nom	High	Lo	Nom	High	Lo	Nom	High
48	30,000	1000	1000	1150	1200	1200	1380	–	–	–	–	–	–
	36,000	1100	1100	1265	1200	1200	1380	1300	1300	1495	–	–	–
	42,000	1225	1225	1409	1225	1225	1409	1350	1350	1553	–	–	–
	48,000	1400	1400	1610	1400	1400	1610	1400	1400	1610	1500	1500	1725
60	36,000	1200	1200	1380	1250	1250	1438	1350	1350	1553	–	–	–
	42,000	1225	1225	1409	1300	1300	1495	1350	1350	1553	–	–	–
	48,000	1400	1400	1610	1400	1400	1610	1400	1400	1610	1750	1750	2013
	60,000	1750	1750	2013	1750	1750	2013	1750	1750	2013	1750	1750	2013
NOTE: Lo, Nom, and Hi refer to AC, HP CFM ADJUST selection.													
"–" Airflow not recommended for heater/system size													

Table 3 – Minimum CFM for Electric Heater Application*

FAN COIL UNIT SIZE	HEAT PUMP UNIT SIZE	CFM				
		HEATER SIZE kW				
		5	8, 9, 10	12, 15	18, 20	24, 30
24	18	700	750	—	—	—
	24	700	750	1050	—	—
	30	875	875	1050	1200	—
	36	1050	1050	1050	1200	—
36	24	700	700	1050	—	—
	30	875	875	1050	—	—
	36	1050	1050	1050	1208	—
	42	1225	1225	1225	1409	—
48	30	—	1000	1200	—	—
	36	—	1100	1200	1300	—
	42	—	1225	1225	1350	—
	48	—	1400	1400	1400	1500
60	36	—	1200	1250	1350	—
	42	—	1225	1300	1350	—
	48	—	1400	1400	1400	1750
	60	—	1750	1750	1750	1750

*. These airflows are minimum acceptable airflows as UL listed. Actual airflow delivered will be per airflow delivery chart for Electric Heating Modes.

© 2023 Carrier. All rights reserved.

Manufacturer reserves the right to change, at any time, specifications and designs without notice and without obligations.